Primaax EX Kenworth Service Manual

Pro Gear's Hendrickson Primaax EX Kenworth Service Manual to assist in identifying your Hendrickson unit.

If you need any assistance identifying the correct transfer case unit for your truck and equipment, contact your Hendrickson replacement part specialists at Pro Gear and Transmission.

Pro Gear Transmission has same day shipping and 1000’s of products in stock and ready to ship internationally for your next project.

For parts or service contact the Hendrickson specialists at Pro Gear & Transmission, Inc.

1 (877) 776-4600
(407) 872-1901
parts@eprogear.com

TECHNICAL PROCEDURE

PRIMAAX® EX • PRIMAAX® Rear Air Suspension for Kenworth Vehicles

SUBJECT: Service Instructions
LIT NO: 17730-263
DATE: June 2019 **REVISION:** F

TABLE OF CONTENTS

HENDRICKSON
The World Rides On Us®

SECTION 1
Introduction

This publication is intended to acquaint and assist maintenance personnel in the preventive maintenance, service, repair, and rebuild of the PRIMAAX® EX • PRIMAAX® rear air suspension systems as installed on applicable Kenworth Vehicles.

NOTE Use only Hendrickson Genuine parts for servicing this suspension system.

It is important to read and understand the entire Technical Procedure publication prior to performing any maintenance, service, repair, or rebuild of this product. The information in this publication contains parts lists, safety information, product specifications, features, proper maintenance, service, repair and rebuild instructions for the PRIMAAX EX • PRIMAAX suspensions.

Hendrickson reserves the right to make changes and improvements to its products and publications at any time. Contact Hendrickson Tech Services for information on the latest version of this manual at 1-866-755-5968 (toll-free U.S. and Canada), 630-910-2800 (outside U.S. and Canada) or e-mail: techservices@hendrickson-intl.com.

The latest revision of this publication is also available online at www.hendrickson-intl.com.

SECTION 2
Product Description

PRIMAAX EX — MAAXimize the performance of vocational and heavy-haul vehicles with a suspension engineered specifically for demanding on- and off- road conditions. With 100 years of robust suspension design, Hendrickson delivers another premium suspension with PRIMAAX EX. Rugged, dependable and extensively tested in challenging applications, PRIMAAX EX paves a new road for suspension technology. Drivers, cargo and vehicles are major investments that require protection. PRIMAAX EX adjusts to variations in load and road conditions for optimal ride and performance. This low-maintenance design delivers greater stability for improved control on and off the job site.

- **Air springs** — Large volume, low frequency design for improved ride. Advance design air springs lift and support the load with less air pressure.
- **Cast structural beam** — Integrate end caps for increased reliability. Utilize premium materials to improve durability. Robust rubber bushings improve service life and eliminate lubrication requirements. Designed for increased disc brake clearance and compatibility.
- **Cross beams** — Seamless fabrication technology forms a robust torsion system with cast structural beams, improving stability. Integrated air spring mounts. Increased ground clearance versus similar air suspensions
- **D-pin axle connection and clamp group** — Decreases torsional axle stress for reduced maintenance and increased joint integrity. Integrated axle stop contact pads reduce axle stress. Newly designed torque rod bar-pin connection for increased reliability and reduced maintenance time
- **Heavy-duty shock absorbers** — Positioned and tuned for optimum damping characteristics. Protects air springs from over-extension.
- **QUIK-ALIGN® Axle Alignment System** — Allows for easy axle alignment without shims. Reduces maintenance time and helps extend tire life
- **Torque Rods —** Three-rod configuration reduces axle stress, welding and complexity. Optimized configuration helps improve handling and roll stiffness for expanded applications. Premium retained rubber bushings for increased service life and resistance to walkout. Designed for optimum clearance and articulation. Alternative rods available for disc brake use.

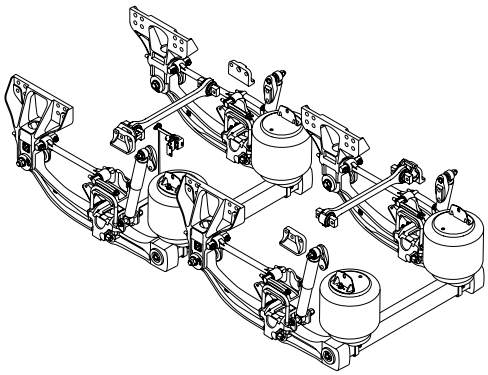

PRIMAAX® EX 23K•46K•69K | 26KS•52KS

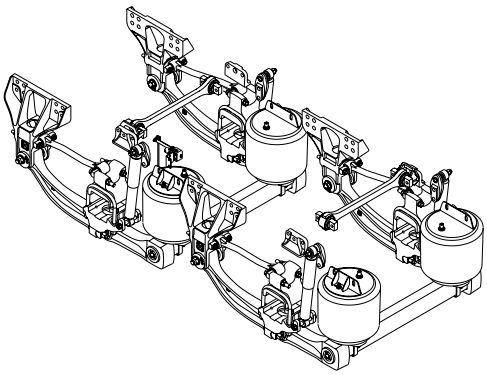

PRIMAAX® EX 26K•52K

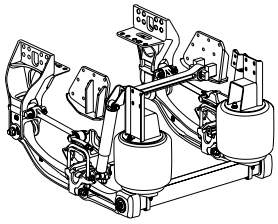

PRIMAAX® EX 23KT•26KT

PRIMAAX EX SPECIFICATIONS

	SINGLE					TANDEM			TRIDEM
	23K	23KT	26K	26KT	26KS	46K	52K	52KS	69K
Rating (in lbs.)	23,000		26,000			46,000	52,000		69,000
Installed Weight[1] (in lbs.)	539	668	652	679	565	1,078	1,292	1,130	1,629
Axle Configuration	Single					Tandem			Tridem
GCW Approval[2] (in lbs.)	95,000		142,000			190,000	245,000	*	*
Job-Site Travel Rating[3] (in lbs.)	30,000		33,000			60,000	66,000		90,000
Axle Travel[4]	8"					8"			8"
Ground Clearance	10.75"		9.0"	10.75"	9.25"	10.75"	10.5"	10.75"	10.75"
Lift Axles	Approved					Approved			Approved
Ride Heights[5]	10"	15.5"	10"	15.5"	8.5"	10"			10"
Engine Torque Restrictions	None					None			None
Axle Spacing	N/A					52"-72.5"	54"-72.5"	52"-72.5"	52"- 60"

PRIMAAX EX is approved for vocational and heavy-haul vehicle applications including, but not limited to: truck, tractor, dump, front and rear discharge mixers, logging, crane mounted, platform, fire / rescue, specialty and vehicles equipped with outriggers. All applications must comply with applicable Hendrickson specifications and must also be approved by the respective vehicle manufacturer with the vehicle in its original, as-built configuration. Contact Hendrickson specifications the respective vehicle manufacturer for approval of additional applications.

1. Installed weight includes complete suspension, torque rods, axle and frame brackets and all hardware. Published weight is based on a standard PRIMAAX EX suspension using 10.0 inch ride height. Other configurations may vary.
2. Contact Hendrickson for applications that may exceed GVW / GCW approval ratings.
3. Job-Site travel rating — operators using vehicles equipped with liftable pusher or tag axles must not exceed published ratings. Ratings are limited to no more than five percent of vehicle operation at a speed not to exceed five mph. Liftable pusher or tag axles should be raised (or unloaded) to improve vehicle maneuverability in off-road use or when vehicle is empty. Site travel ratings are consistent with published axle manufacturer's limitations. Axle and suspension site travel specifications must not be exceeded.
4. Suspension articulation may exceed vehicle's capability and may be limited by vehicle manufacturer; vehicle manufacturer installed axle stop may restrict suspensions articulation.
5. Contact Hendrickson for availability of beam lengths.
6. Shock absorbers are required in tractor and logging applications. Ride and traction may be improved in other applications with shock absorbers. Ride performance can be subjective and may be dependent on many factors beyond the suspension design, such as cab suspension, road conditions, body / auxiliary equipment, frame specifications, etc. Contact Hendrickson on your truck manufacturer / dealer for further information.

SECTION 3
Important Safety Notice

Proper maintenance, service and repair are important to the reliable operation of the suspension. The procedures recommended by Hendrickson and described in this technical publication are methods of performing such maintenance, service and repair.

This technical publication should be read carefully to help prevent personal injury and to assure that proper methods are used. Improper maintenance, service or repair may damage the vehicle, cause personal injury, render the vehicle unsafe in operation, or void the manufacturer's warranty.

Failure to follow the safety precautions in this manual can result in personal injury and/or property damage. Carefully read and understand all safety related information within this publication, on all decals and in all such materials provided by the vehicle manufacturer before conducting any maintenance, service or repair.

EXPLANATION OF SIGNAL WORDS

Hazard "Signal Words" (Danger • Warning • Caution) appear in various locations throughout this publication. Information accented by one of these signal words must be observed to help minimize the risk of personal injury to service personnel, or possibility of improper service methods which may damage the vehicle or render it unsafe.

This is the safety alert symbol. It is used to alert you to potential personal injury hazards. Obey all safety messages that follow this symbol to avoid possible injury or death.

Additional Notes or Service Hints are utilized to emphasize areas of procedural importance and provide suggestions for ease of repair. The following definitions indicate the use of these signal words as they appear throughout the publication.

DANGER — INDICATES AN IMMINENTLY HAZARDOUS SITUATION, WHICH IF NOT AVOIDED, WILL RESULT IN SERIOUS INJURY OR DEATH.

WARNING — INDICATES A POTENTIAL HAZARDOUS SITUATION WHICH, IF NOT AVOIDED, CAN RESULT IN SERIOUS INJURY OR DEATH.

CAUTION — INDICATES A POTENTIAL HAZARDOUS SITUATION WHICH, IF NOT AVOIDED, MAY RESULT IN MINOR OR MODERATE INJURY.

NOTE — An operating procedure, practice condition, etc., which is essential to emphasize.

SERVICE HINT — A helpful suggestion that will make the servicing being performed a little easier and/or faster.

Also note that particular service operations may require the use of special tools designed for specific purposes. These special tools can be found in the "Special Tools" Section of this publication.

The torque symbol alerts you to tighten fasteners to a specified torque value. Refer to Torque Specifications Section of this publication.

SAFETY PRECAUTIONS

WARNING

FASTENERS

DISCARD USED FASTENERS. ALWAYS USE NEW FASTENERS TO COMPLETE A REPAIR. FAILURE TO DO SO COULD RESULT IN FAILURE OF THE PART, OR MATING COMPONENTS, ADVERSE VEHICLE HANDLING, PERSONAL INJURY, OR PROPERTY DAMAGE.

LOOSE OR OVER TORQUED FASTENERS CAN CAUSE COMPONENT DAMAGE, ADVERSE VEHICLE HANDLING, PROPERTY DAMAGE, OR SEVERE PERSONAL INJURY. MAINTAIN CORRECT TORQUE VALUE AT ALL TIMES. CHECK TORQUE VALUES ON A REGULAR BASIS AS SPECIFIED, USING A REGULARLY CALIBRATED TORQUE WRENCH. TORQUE VALUES SPECIFIED IN THIS TECHNICAL PUBLICATION ARE FOR HENDRICKSON SUPPLIED FASTENERS ONLY. IF NON HENDRICKSON FASTENERS ARE USED, FOLLOW TORQUE SPECIFICATIONS LISTED IN THE VEHICLE MANUFACTURER'S SERVICE MANUAL.

WARNING

QUIK-ALIGN FASTENERS

DISCARD USED QUIK-ALIGN FASTENERS. ALWAYS USE NEW QUIK-ALIGN FASTENERS TO COMPLETE A REPAIR. FAILURE TO DO SO COULD RESULT IN FAILURE OF THE PART, OR MATING COMPONENTS, ADVERSE VEHICLE HANDLING, PERSONAL INJURY, OR PROPERTY DAMAGE.

DO NOT ASSEMBLE QUIK-ALIGN JOINT WITHOUT THE PROPER FASTENERS. USE ONLY H-COATED FASTENERS TO SUSTAIN PROPER CLAMP FORCE. FAILURE TO DO SO CAN CAUSE ADVERSE VEHICLE HANDLING, PROPERTY DAMAGE OR PERSONAL INJURY AND VOID WARRANTY. ENSURE THAT THE QUIK-ALIGN FASTENER'S TORQUE VALUES ARE SUSTAINED AS RECOMMENDED IN THE TORQUE SPECIFICATIONS SECTION OF THIS PUBLICATION. FAILURE TO DO SO CAN CAUSE ADVERSE VEHICLE HANDLING RESULTING IN PERSONAL INJURY OR PROPERTY DAMAGE. FOLLOW VEHICLE MANUFACTURER'S FASTENER ORIENTATION WHEN PERFORMING ANY MAINTENANCE, SERVICE OR REPAIR.

WARNING

LOAD CAPACITY

ADHERE TO THE PUBLISHED CAPACITY RATINGS FOR THE SUSPENSION. ADD-ON AXLE ATTACHMENTS AND OTHER LOAD TRANSFERRING DEVICES, SUCH AS LIFTABLE AXLES, CAN INCREASE THE SUSPENSION LOAD ABOVE ITS RATED AND APPROVED CAPACITIES, WHICH CAN RESULT IN COMPONENT DAMAGE AND ADVERSE VEHICLE HANDLING, POSSIBLY CAUSING PERSONAL INJURY OR PROPERTY DAMAGE.

WARNING

MODIFYING COMPONENTS

DO NOT MODIFY OR REWORK PARTS WITHOUT AUTHORIZATION FROM HENDRICKSON. DO NOT SUBSTITUTE REPLACEMENT COMPONENTS NOT AUTHORIZED BY HENDRICKSON. USE OF MODIFIED, REWORKED, SUBSTITUTE OR REPLACEMENT PARTS NOT AUTHORIZED BY HENDRICKSON MAY NOT MEET HENDRICKSON'S SPECIFICATIONS, AND CAN RESULT IN FAILURE OF THE PART, ADVERSE VEHICLE HANDLING, POSSIBLE PERSONAL INJURY OR PROPERTY DAMAGE, AND WILL VOID ANY APPLICABLE WARRANTIES. USE ONLY HENDRICKSON AUTHORIZED REPLACEMENT PARTS.

WARNING

TORCH/WELDING

DO NOT USE A CUTTING TORCH TO REMOVE ANY FASTENERS. THE USE OF HEAT ON SUSPENSION COMPONENTS WILL ADVERSELY AFFECT THE STRENGTH OF THESE PARTS. A COMPONENT DAMAGED IN THIS MANNER CAN RESULT IN THE ADVERSE VEHICLE HANDLING AND POSSIBLE PERSONAL INJURY OR PROPERTY DAMAGE.

EXERCISE EXTREME CARE WHEN HANDLING OR PERFORMING MAINTENANCE IN THE AREA OF THE SUPPORT BEAM. DO NOT CONNECT ARC WELDING GROUND LINE TO THE SUPPORT BEAM. DO NOT STRIKE AN ARC WITH THE ELECTRODE ON THE SUPPORT BEAM. DO NOT USE HEAT NEAR THE SUPPORT BEAM ASSEMBLY. DO NOT NICK OR GOUGE THE SUPPORT BEAM. SUCH IMPROPER ACTIONS CAN DAMAGE THE SUPPORT BEAM ASSEMBLY AND CAUSE ADVERSE VEHICLE HANDLING AND POSSIBLE PERSONAL INJURY OR PROPERTY DAMAGE.

WARNING

PERSONAL PROTECTIVE EQUIPMENT

ALWAYS WEAR PROPER EYE PROTECTION AND OTHER REQUIRED PERSONAL PROTECTIVE EQUIPMENT TO HELP PREVENT PERSONAL INJURY WHEN PERFORMING VEHICLE MAINTENANCE, REPAIR OR SERVICE.

CAUTION

PROCEDURES AND TOOLS

A TECHNICIAN USING A SERVICE PROCEDURE OR TOOL WHICH HAS NOT BEEN RECOMMENDED BY HENDRICKSON MUST FIRST SATISFY HIMSELF THAT NEITHER HIS SAFETY NOR THE VEHICLE'S SAFETY WILL BE JEOPARDIZED BY THE METHOD OR TOOL SELECTED. INDIVIDUALS DEVIATING IN ANY MANNER FROM THE INSTRUCTIONS PROVIDED WILL ASSUME ALL RISKS OF CONSEQUENTIAL PERSONAL INJURY OR DAMAGE TO EQUIPMENT INVOLVED.

CAUTION

AIR SPRING LOWER MOUNTING STUDS

IF THE AIR SPRING IS BEING REMOVED FOR AN ALTERNATE REPAIR, IT IS MANDATORY TO LUBRICATE THE LOWER AIR SPRING FASTENERS WITH PENETRATING OIL AND REMOVE WITH HAND TOOLS TO PREVENT DAMAGE TO THE LOWER AIR SPRING MOUNTING STUD. FAILURE TO DO SO CAN CAUSE COMPONENT DAMAGE AND VOID WARRANTY.

WARNING

AIR SPRING PRESSURE RETENTION

SOME VEHICLE APPLICATIONS, SUCH AS VEHICLES EQUIPPED WITH OUTRIGGERS, RETAIN SOME AIR PRESSURE IN THE AIR SPRINGS AT ALL TIMES. PRIOR TO PERFORMING ANY MAINTENANCE, SERVICE, OR REPAIR OF THE SUSPENSION, VERIFY EACH AIR SPRING IS COMPLETELY DEFLATED. FAILURE TO DO SO COULD RESULT SERIOUS PROPERTY DAMAGE AND/OR SEVERE PERSONAL INJURY.

WARNING

FAILURE TO PRESS THE AIR SPRING AGAINST THE UNDERSIDE OF THE FRAME WHILE TIGHTENING THE UPPER AIR SPRING BRACKET CAN RESULT IN COMPONENT DAMAGE AND PERSONAL INJURY OR PROPERTY DAMAGE.

WARNING

AIR SPRING INFLATION AND DEFLATION

PRIOR TO DISASSEMBLY OF THE SUSPENSION, AIR SPRING ASSEMBLIES MUST BE DEFLATED. UNRESTRICTED AIR SPRING ASSEMBLIES CAN VIOLENTLY SHIFT. DO NOT INFLATE AIR SPRING ASSEMBLIES WHEN THEY ARE UNRESTRICTED. AIR SPRING ASSEMBLIES MUST BE RESTRICTED BY SUSPENSION OR OTHER ADEQUATE STRUCTURE. DO NOT INFLATE BEYOND PRESSURES RECOMMENDED BY AIR SPRING MANUFACTURER, CONTACT HENDRICKSON TECHNICAL SERVICES FOR DETAILS. IMPROPER USE OR OVER INFLATION MAY CAUSE AIR SPRING ASSEMBLIES TO BURST, CAUSING PROPERTY DAMAGE AND/OR SEVERE PERSONAL INJURY.

PRIOR TO AND DURING DEFLATION AND INFLATION OF THE AIR SUSPENSION SYSTEM, ENSURE ALL PERSONNEL AND EQUIPMENT ARE CLEAR FROM UNDER THE VEHICLE AND AROUND THE SERVICE AREA, FAILURE TO DO SO CAN CAUSE SERIOUS PERSONAL INJURY, DEATH, OR PROPERTY DAMAGE.

CAUTION

AIR SPRING INFLATION

INFLATE THE SUSPENSION SLOWLY AND MAKE SURE THE RUBBER BLADDER OF THE AIR SPRING INFLATES UNIFORMLY AND IS NOT BINDING. FAILURE TO DO SO CAN CAUSE DAMAGE TO THE AIR SPRING AND/OR MOUNTING BRACKETS AND VOID WARRANTY.

WARNING

TRANSVERSE RODS

PRIMAAX EX • PRIMAAX SUSPENSIONS INCORPORATE TRANSVERSE RODS FOR VEHICLE STABILITY. IF THESE COMPONENTS ARE DISCONNECTED OR ARE NON-FUNCTIONAL, THE VEHICLE SHOULD NOT BE OPERATED. FAILURE TO DO SO CAN RESULT IN ADVERSE VEHICLE HANDLING, POSSIBLE TIRE CONTACT WITH THE FRAME OR THE SUSPENSION, PREMATURE COMPONENT DAMAGE, OR SEVERE PERSONAL INJURY.

Pro Gear and Transmission • 906 W. Gore St. Orlando, FL 32805 • 1 (877) 776-4600 / (407) 872-1901 • parts@eprogear.com

WARNING

SUPPORT THE VEHICLE PRIOR TO SERVICING

PLACE THE VEHICLE ON A LEVEL FLOOR AND CHOCK THE WHEELS TO PREVENT THE VEHICLE FROM MOVING OR ROLLING. DO NOT WORK AROUND OR UNDER A RAISED VEHICLE SUPPORTED BY ONLY A FLOOR JACK OR OTHER LIFTING DEVICE. ALWAYS SUPPORT A RAISED VEHICLE WITH RIGID SAFETY STANDS. FAILURE TO DO SO CAN CAUSE SERIOUS PERSONAL INJURY OR DAMAGE TO EQUIPMENT.

WARNING

SHOCK ABSORBERS

THE SHOCK ABSORBERS ARE THE REBOUND TRAVEL STOPS FOR THE SUSPENSION. ANYTIME THE AXLE ON A PRIMAAX EX • PRIMAAX SUSPENSION IS SUSPENDED IT IS MANDATORY THAT THE SHOCK ABSORBERS REMAIN CONNECTED. FAILURE TO DO SO CAN CAUSE THE AIR SPRINGS TO SEPARATE FROM THE PISTON AND RESULT IN PREMATURE AIR SPRING FAILURE. REPLACEMENT OF SHOCK ABSORBERS WITH NON-HENDRICKSON PARTS CAN ALTER THE REBOUND TRAVEL OF THE SUSPENSION.

WARNING

CROSS TUBE

IMPROPER JACKING METHODS CAN CAUSE STRUCTURAL DAMAGE (SEE SAFETY DECAL, FIGURE 3-1) AND RESULT IN ADVERSE VEHICLE HANDLING, SEVERE PERSONAL INJURY OR DEATH AND WILL VOID HENDRICKSON'S WARRANTY.

FIGURE 3-1 SAFETY DECAL PART NUMBER 60905-015

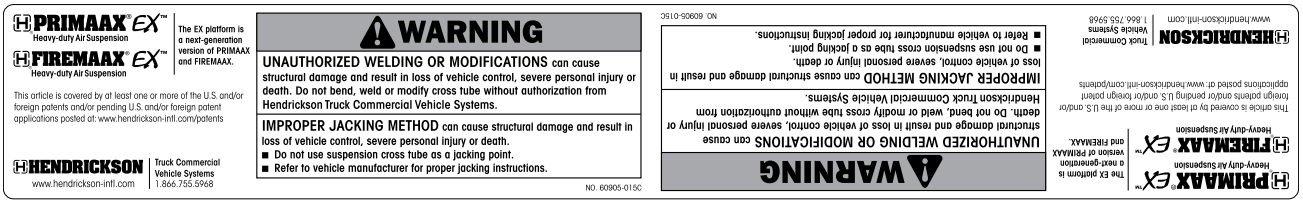

- REPLACE ANY SAFETY DECALS THAT ARE FADED, TORN, MISSING, ILLEGIBLE, OR OTHERWISE DAMAGED. CONTACT HENDRICKSON TO ORDER REPLACEMENT LABELS
- DO NOT USE THE SUSPENSION CROSS TUBE AS A JACKING POINT TO RAISE THE VEHICLE, SEE FIGURE 3-2
- REFER TO VEHICLE MANUFACTURER FOR PROPER JACKING INSTRUCTIONS, SEE FIGURE 3-3

FIGURE 3-2

FIGURE 3-3

WARNING

WORK SITE DUMPING

WHEN THE TRUCK/TRAILER BODY/BOOM AND/OR ATTACHMENT IS LIFTED IT IS MANDATORY TO COMPLETELY EXHAUST THE AIR FROM THE SUSPENSION SYSTEM TO HELP PROVIDE STABILITY WHEN LIFTED. FAILURE TO DO SO CAN RESULT IN ADVERSE VEHICLE HANDLING, ROLL-OVER, OR VEHICLE INSTABILITY, POSSIBLY CAUSING SEVERE PERSONAL INJURY, PROPERTY DAMAGE, OR DEATH. FIRST RAISE ANY AUXILIARY AXLES AND THEN EXHAUST ALL PRESSURE FROM REAR TRACTOR/TRAILER AND TRUCK AIR SUSPENSION SYSTEMS PRIOR TO RAISING THE BODY/BOOM AND/OR ATTACHMENTS. FOLLOW THE VEHICLE MANUFACTURER'S OPERATING INSTRUCTIONS FOR MAINTAINING PROPER STABILITY.

WARNING

PARTS CLEANING

SOLVENT CLEANERS CAN BE FLAMMABLE, POISONOUS, AND CAUSE BURNS. TO HELP AVOID SERIOUS PERSONAL INJURY, CAREFULLY FOLLOW THE MANUFACTURER'S PRODUCT INSTRUCTIONS AND GUIDELINES AND THE FOLLOWING PROCEDURES:

1. WEAR PROPER EYE PROTECTION.
2. WEAR CLOTHING THAT PROTECTS YOUR SKIN.
3. WORK IN A WELL-VENTILATED AREA.
4. DO NOT USE GASOLINE OR SOLVENTS THAT CONTAIN GASOLINE. GASOLINE CAN EXPLODE.
5. HOT SOLUTION TANKS OR ALKALINE SOLUTIONS MUST BE USED CORRECTLY. FOLLOW THE MANUFACTURER'S RECOMMENDED INSTRUCTIONS AND GUIDELINES CAREFULLY TO HELP PREVENT PERSONAL ACCIDENT OR INJURY.

DO NOT USE HOT SOLUTION TANKS OR WATER AND ALKALINE SOLUTIONS TO CLEAN GROUND OR POLISHED PARTS. DOING SO WILL CAUSE DAMAGE TO THE PARTS AND VOID WARRANTY.

Pro Gear and Transmission • 906 W. Gore St. Orlando, FL 32805 • 1 (877) 776-4600 / (407) 872-1901 • parts@eprogear.com

SECTION 4
Special Tools

D-PIN / QUIK-ALIGN PIVOT BUSHING SERVICE TOOLS

Hendrickson Part No. 66086-202

OTC Part No. 4246 Visit otctools.com

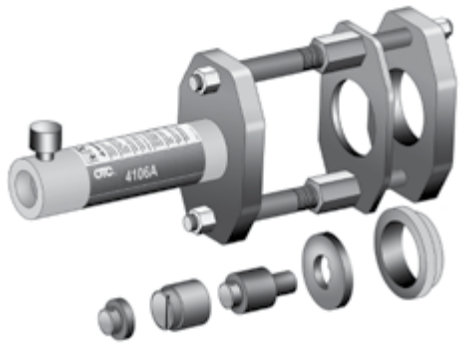

Hendrickson Part No. 66086-204

OTC Part No. 4247 Visit otctools.com

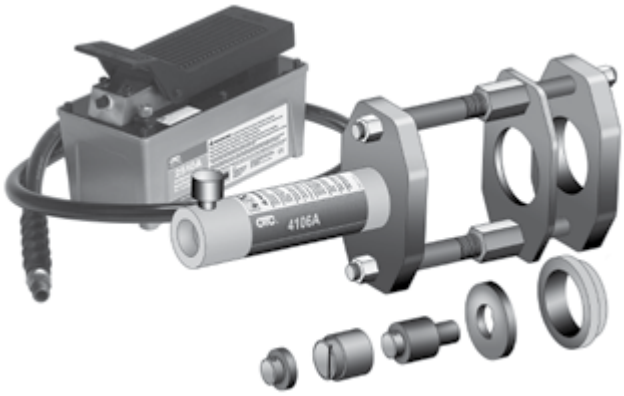

Hendrickson Part No. 66086-205

OTC Part No. 4254 Visit otctools.com

NOTE: In conjunction with Hendrickson Part No. 66086-204 (OTC 4247) this additional adapter tool kit is available to purchase to be used on Hendrickson SOFTEK NXT suspension (not needed for this suspension)

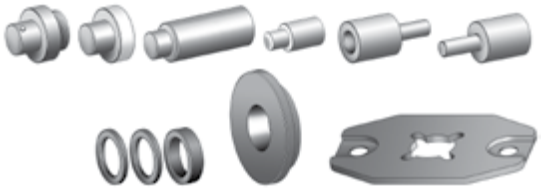

QUIK-ALIGN PIVOT BUSHING SERVICE TOOL

Hendrickson Part No. 66086-203L

Reference Literature No. 59310-061

QUIK-ALIGN SOCKET TOOL

Hendrickson Part No. 66086-200

OTC Part No. 1767

Visit otctools.com

PRIMAAX QUIK-WRENCH TOOL

Hendrickson Part No. 66086-201

OTC Part No. 1768

Visit otctools.com

FOR USE on vehicles built **prior to March 2009** equipped with detachable end cap. **NOT FOR USE** on **PRIMAAX EX** model suspensions.

Use to tighten the detachable end cap bolts, as shown in graphic below.

- Reduces maintenance time by eliminating the need to remove the tires to gain access to the detachable end cap bolt

NOTE: Due to some vehicle configurations and/or tire sizes wheel removal may be required.

Support Beam with Detachable End Cap

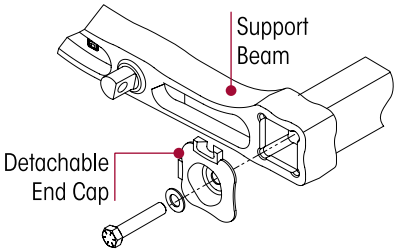

Top Pad

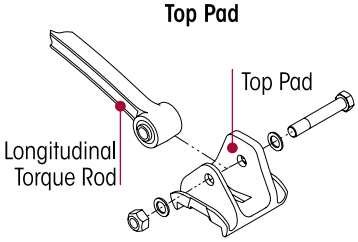

TORQUE ROD BUSHING TOOLS

FUNNEL

ULTRA ROD® – Hendrickson Part No. 66086-001L

ULTRA ROD® PLUS™ – Hendrickson Part No. 66086-000L

NOTE: Some torque rod assemblies equipped on the PRIMAAX EX • PRIMAAX suspensions have curled end hubs and are not re-bushable. The entire torque rod assembly must be replaced. This feature provides superior bushing retention in the torque rod end hub. These torque rods can be identified by the part number: 67428-XXX • 67219-XXX • 65302-XXX or the suffix N after any part number (i.e. 62000-615N).

These shop made tools are designed to install and remove torque rod bushings. Bushing tools are made from cold rolled steel or equivalent. Drawings are for reference only. Hendrickson does not supply these tools.

RECEIVING TOOLS

ULTRA ROD

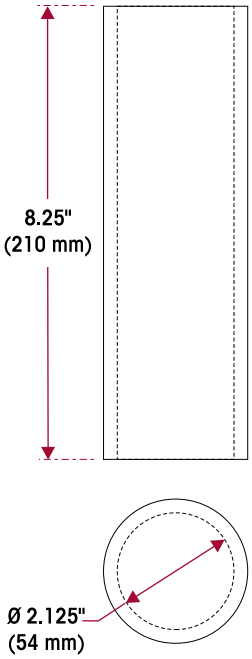

ULTRA ROD PLUS • XTRB

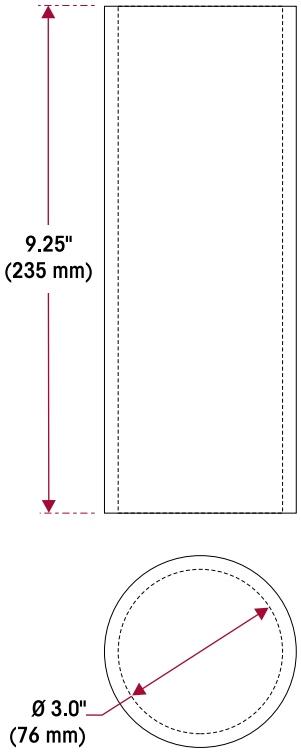

INSTALLATION / REMOVAL TOOLS

ULTRA ROD

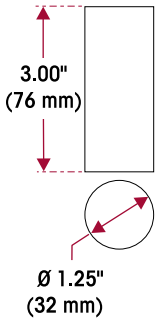

ULTRA ROD PLUS • XTRB

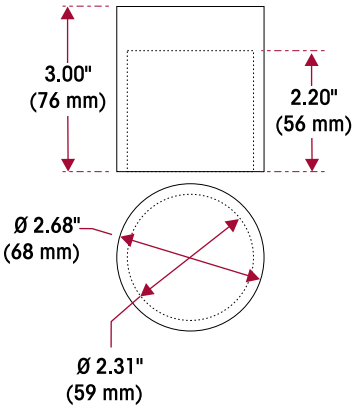

Pro Gear and Transmission • 906 W. Gore St. Orlando, FL 32805 • 1 (877) 776-4600 / (407) 872-1901 • parts@eprogear.com

SECTION 5
Parts Lists

■ Technical Notes

The following information is intended to assist in determining which suspension is equipped on the vehicle. As an example, in Figures 5-1 and 5-2, the end cap/frame hanger help identify whether the suspension is current model PRIMAAX EX or the previous production model PRIMAAX.

FIGURE 5-1 — **PRIMAAX EX or PRIMAAX**

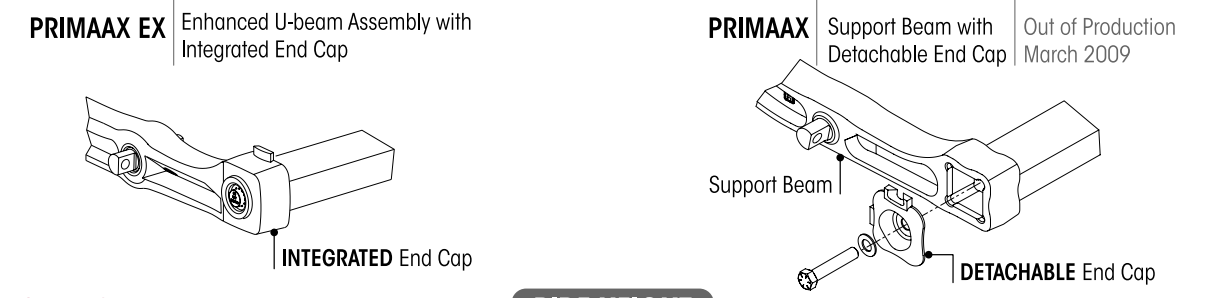

FIGURE 5-2 — **RIDE HEIGHT**

Frame Hangers

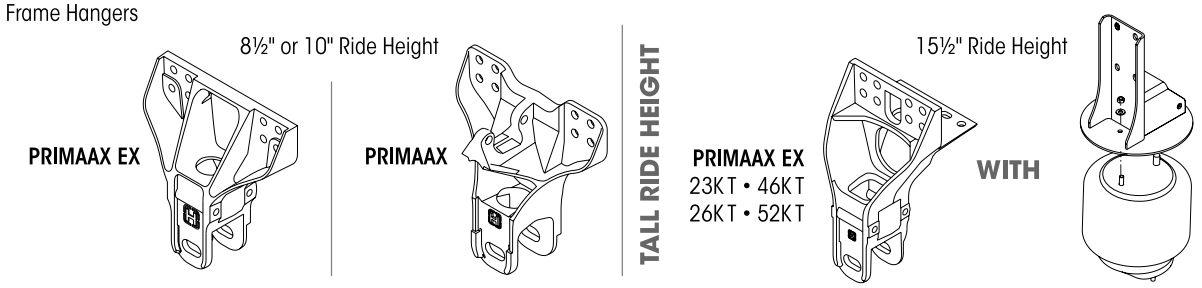

FIGURE 5-3 — **SUSPENSION RATING / CAPACITY**

PRIMAAX EX 23K • 46K • 69K
PRIMAAX 230 • 460 • 690
• Distance Between U-bolts — **4 5/16"**

PRIMAAX EX 26K • 52K
PRIMAAX 260• 520
• Distance Between U-bolts — **5.0"**

PRIMAAX EX 26K S • 52K S
• Distance Between U-bolts — **4 5/16"**

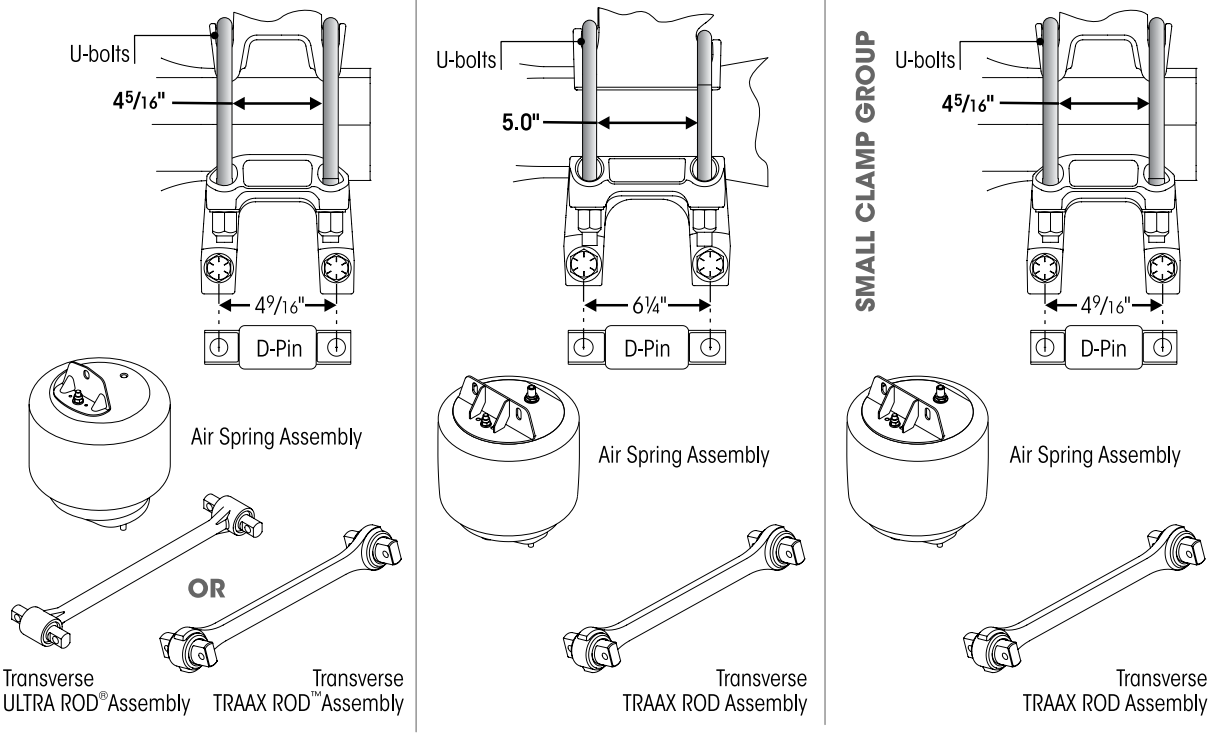

■ Bottom Cap • Longitudinal Torque Rod Assembly • Top Pad • Torque Rod Spacer Selection Guide

Bottom Cap

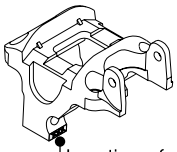

Location of stamped Part No. (last three digits) or see pinion angle chart below

DRUM BRAKE Configuration

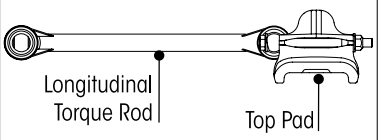

DISC BRAKE Configuration

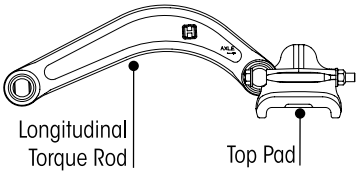

Torque Rod Spacer

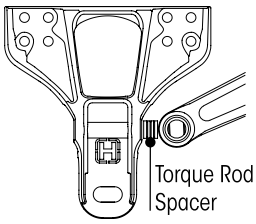

	PRIMAAX EX 23K • 46K • 69K | 26KS • 52KS Page 14							PRIMAAX 230 • 460 • 690 Page 20	
	Drum Brakes		Air Disc Brakes					Drum Brakes	
Pinion Angle	Bottom Cap	*Longitudinal Torque Rod Assembly	Bottom Cap	*Longitudinal Torque Rod Assembly	Top Pad	**Torque Rod Spacer	D-Pin Bolt Length	Bottom Cap	Longitudinal Torque Rod Assembly
Forward Rear									
1.5°	60556-035	67428-425	60556-035	67219-435	65289-003 (LH) 65289-004 (RH)	—	4¾"	—	—
2.0°	60556-040		60556-040			—			
2.5°	60556-025	67428-435	60556-025			9 mm		60556-025	60827-605A (LH) 60827-605B (RH)
3.0°	60556-030		60556-030					60556-030	
3.5°	60556-035		60556-035					60556-035	
4.0°	60556-040		60556-040					60556-040	
4.5°	60556-045							60556-045	
5.0°	60556-050							60556-050	
5.5°	60556-055							60556-055	
Rear Rear									
6.0°	60556-060	67428-435	60556-025	67219-435	65289-000	15 mm	4¾"	60556-060	60827-605A 60827-605B
6.5°	60556-065		60556-035					60556-065	
7.0°	60556-040	67428-450	60556-040					60556-110	64717-620A (LH) 64717-620B (RH)
7.5°	60556-045		60556-045				5"	60556-115	
8.0°	60556-050		60556-050					60556-120	
8.5°	60556-110	67428-460	60556-110			25 mm	4¾"	60556-125	
9.0°	60556-115		60556-115					60556-130	
9.5°	60556-120		60556-120				5"	60556-135	
10.0°	60556-100	67428-475	60556-100			—	4¾"	60556-100	60827-645A (LH) 60827-645B (RH)
10.5°	60556-105		60556-105	67219-475				60556-105	
11.0°	60556-110		60556-110					60556-110	
11.5°	60556-115		60556-115					60556-115	
12.0°	60556-120		60556-120				5"	60556-120	
12.5°	60556-125		60556-125					60556-125	
13.0°	60556-130		60556-130				5¼"	60556-130	
13.5°	60556-135							60556-135	
14.0°	60556-140							60556-140	
14.5°	60556-145							60556-145	

NOTES: * Torque rod bushings are non-serviceable, replace the complete torque rod assembly that includes bushings.

** Not supplied by Hendrickson, used for reference only. Hendrickson is not responsible for components supplied by the vehicle manufacturer. For assistance with maintenance and rebuild instructions on these components see vehicle manufacturer.

Bottom Cap and Top Pad Selection Guide

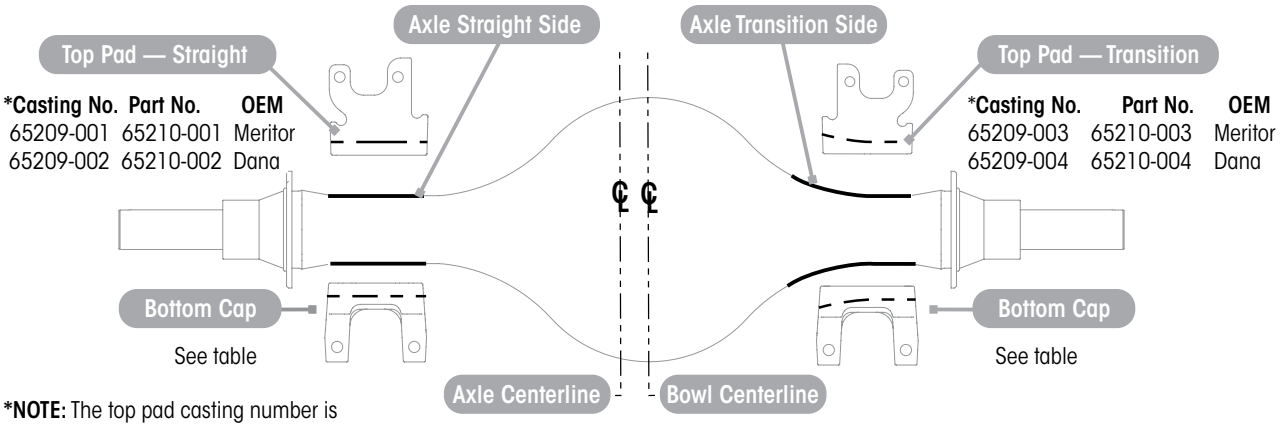

***NOTE:** The top pad casting number is located on bottom surface of the top pad.

Page 16 PRIMAAX EX 26K • 52K
Page 22 PRIMAAX 260 • 520

Bottom Cap Part Number							
Beam Centers	Axle Manufacturer	Tandem				Single	
		Straight Side		Transition Side		Straight Side	Transition Side
		Front	Rear	Front	Rear		
40.0"	Meritor	65208-101	65208-103	65208-106	65208-109	65208-101	65208-105
	Dana	65208-102	65208-104	65208-108	65208-111	Contact Hendrickson for Part Nos.	

Longitudinal Torque Rod • Top Pad Selection Guide

Page 16 PRIMAAX EX 26K • 52K

Pinion Angle	Axle Manufacturer	*Longitudinal Torque Rod Assembly	Top Pad	
			Left	Right
Front Rear				
1.5°		65302-460	65210-001	65210-003
2.0°			65210-002	65210-004
2.5° - 3.0°	Dana Meritor	65302-470	65210-002 65210-001	65210-004 65210-003
3.5°			65210-002	65210-004
4.0°	Dana Meritor	65302-475	65210-002 65210-001	65210-004 65210-003
Rear Rear				
9.0° - 9.5°		65302-510	65210-004	65210-002
10.0°		65302-520	65210-004	65210-002
10.5°	Dana Meritor	65302-515 65302-520	65210-004 65210-003	65210-002 65210-001
11.0°		65302-520	65210-003	65210-001
11.5°	Dana Meritor	65302-525 65302-520 65302-525	65210-004 65210-003 65210-003	65210-002 65210-001 65210-001
12.0°		65302-525	65210-003	65210-001
13.0°		65302-530	65210-003	65210-001

Page 22 PRIMAAX 260 • 520

Pinion Angle	Longitudinal Torque Rod Assembly	
	Left	Right
2.0° - 3.5°	66359-650A	66359-650B
4.0° - 5.5°	66359-660A	66359-660B
10.0° - 10.5°	66359-585A	66359-585B
11.0° - 11.5°	66359-590A	66359-590B
12.0° - 12.5°	66359-595A	66359-595B

NOTE: * Torque rod bushings are non-serviceable, replace the complete torque rod assembly that includes bushings.

PRIMAAX EX 23K • 46K • 69K | 26K S • 52K S

S – designates Small Clamp Group

10" Ride Height

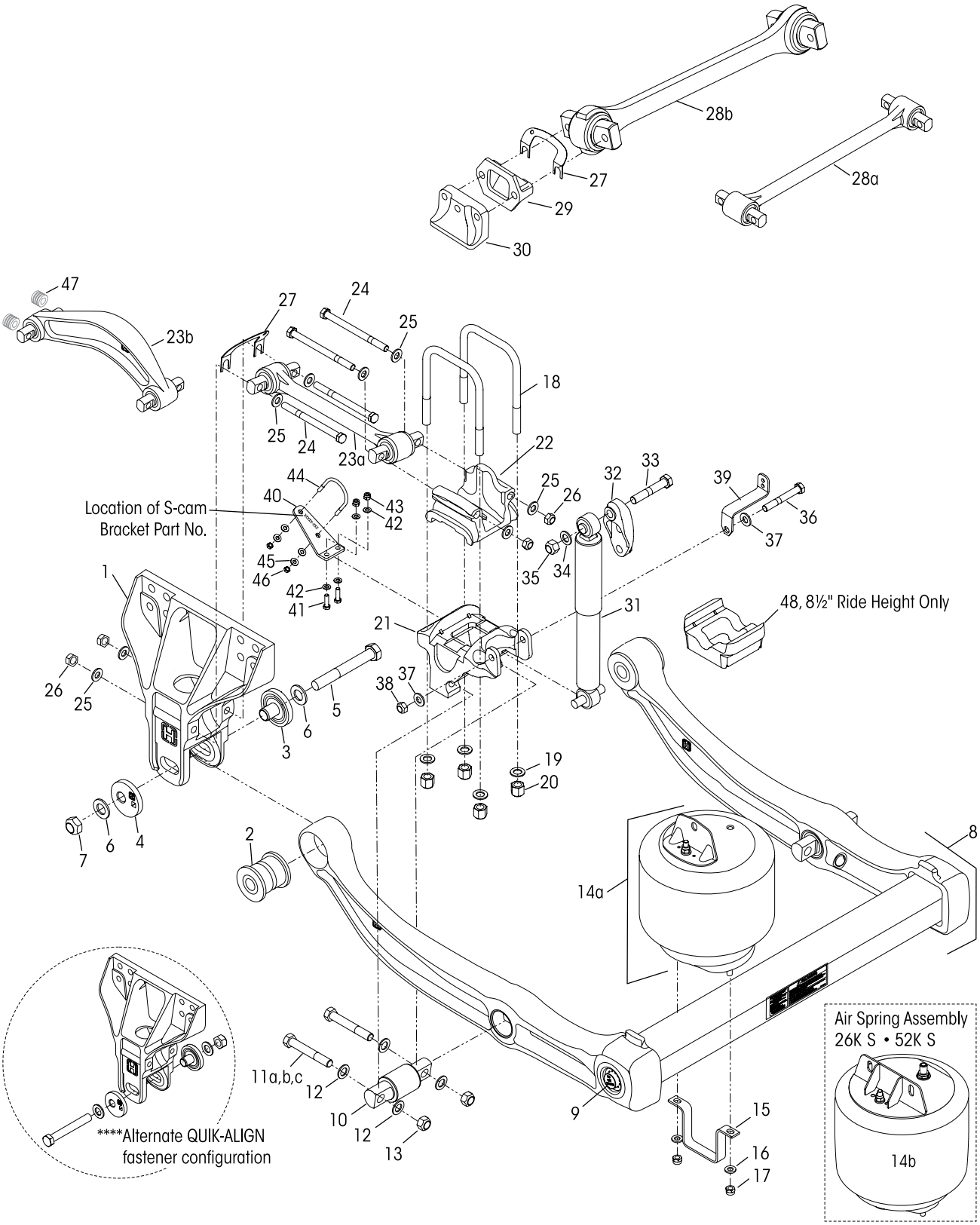

KEY NO.	PART NO.	DESCRIPTION	VEHICLE *QTY.
1	67706-000	EX Frame Hanger	4
		QUIK-ALIGN Pivot Bushing Service Kits, Includes Key Nos. 2-7, 49	
	60961-720	**One Wheel End**	
	60632-020	**Axle Set**	
		QUIK-ALIGN Collar Service Kit, Includes Key Nos. 3-7	
	60632-019	**One Wheel End**	
	60632-021	**Axle Set**	
	60632-018	**QUIK-ALIGN Fastener Service Kit One Wheel End,** Includes Key Nos. 5-7	
2		**QUIK-ALIGN Pivot Bushing	4
3		**QUIK-ALIGN Concentric Collar	4
4		**QUIK-ALIGN Eccentric Collar	4
5		**1"-14 UNF-2A x 7½" Hex Bolt	4
6		**1" H-Coat Flat Washer	8
7		**1"-14 UNF-2B Locknut	4
8		U-beam Assembly, Includes Key Nos. 2, 10	
	67249-003	Rear	1
	67249-004	Front, Middle for Tridem	1
9		**U-beam Assembly Enhancement Aftermarket Service Kit,** *see Page 24 for contents*	
	69565-001	**Axle Set**	
	69565-002	**One Wheel End**	
		Single D-Pin Bushing Service Kit,	
	34013-107	Includes Key Nos. 10, 11a, 12-13	
	34013-116	Includes Key Nos. 10, 11b, 12-13	
	34013-117	Includes Key Nos. 10, 11c, 12-13	
10		**D-Pin Bushing	4
		D-Pin Fastener Service Kit, Axle Set	
	56659-009	Includes Key Nos. 11a, 12-13	
	56659-013	Includes Key Nos. 11b, 12-13	
	56659-012	Includes Key Nos. 11c, 12-13	
11		**¾"-16 UNF Bolt	8
a		Length 5"	
b		Length 5½"	
c		Length 4¾"	
12		**¾" Flat Washer	16
13		**¾"-16 UNF Locknut	8
		Single Air Spring Service Kit,	
	60961-230	23K • 46K • 69K, Includes Key Nos. 14a, 15-17	
	60961-744	26KS • 52KS, Includes Key Nos. 14b, 15-17	
14		Air Spring Assembly, Includes Upper Frame Bracket	
a	67043-002L	23K • 46K • 69K	
b	67247-002	26KS • 52KS	
15	60911-002	Lower Air Spring Mounting Bracket	4
	49177-006	**Lower Air Spring Fastener Service Kit, Single,** Includes Key Nos. 16-17	
16		**½" Flat Washer	8
17		**½"-13 UNC Locknut	8
	48718-129	**U-bolt Service Kit, One Wheel End,** Includes Key Nos. 18-20	
18		**¾" Square U-bolt - Length 8⅞"	8
19		**¾" Flat Washer	16
20		**¾"-16 UNF U-bolt Locknut	16

KEY NO.	PART NO.	DESCRIPTION	VEHICLE *QTY.
21	60556-XXX	Bottom Cap, *see Selection Guide on Page 12*	4
22		Top Pad	4
	65289-000	Drum Brakes	
	65289-XXX	Disc Brakes, *see Selection Guide on Page 12*	
23		Longitudinal Torque Rod Assembly, *see Selection Guide on Page 12*	4
a	67428-XXX	Drum Brakes	
b	67219-XXX	Disc Brakes	
	49176-032	**Longitudinal Torque Rod Fastener Service Kit, One Torque Rod,** Includes Key Nos. 24-26	
24		**⅝"-11 UNC-2B x 8" Bolt	16
25		**⅝" Flat Washer	32
26		**⅝"-11 UNC-2A Locknut	16
27	49689-000	Shim (As Required)	
28		***Transverse Torque Rod Assembly	2
a	62000-565N	ULTRA ROD®, *Replaces 67428-565*	
b	8240-0000-560	TRAAX ROD™, *Replaces 72000-560C*	
29	22186-000	Transverse Torque Rod Frame Bracket	2
30	60593-000	Frame Mounted Axle Stop	4
31		Shock Absorber	4
	60657-017L	23K•46K•69K Standard, except Tridem, *Replaces 60657-003L*	
	60657-005L	23K•46K•69K Tridem Only	
	70807-001L	23K•46K•69K Heavy-duty, Optional, except Tridem	
	60665-011L	26KS • 52KS	
32	67463-002	Upper Shock Frame Bracket	4
		Single Shock Fastener Service Kit	
	50754-030	23K • 46K • 69K, Includes Key Nos. 33-35, 36a-38	
	50754-029	26KS • 52KS, Includes Key Nos. 33-35, 36b-38	
33		**¾"-10 UNC x 4¼" Upper Shock Bolt	4
34		**¾" Flat Washer	4
35		**¾"-10 UNC Locknut	4
36		**⅝"-11 UNC Lower Shock Bolt	4
a		6.0"	
b		7.0"	
37		**⅝" Flat Washer	8
38		**⅝"-11 UNC-2B Locknut	4
39	60921-000	Height Control Valve Linkage Bracket	1
40	64508-XXX	S-cam Support Bracket, *see part number on component*	4
	58821-017	**S-cam Fastener Service Kit, Axle Set,** Includes Key Nos. 41-46	
41		**⅜"-16 UNC x 1¼" Hex Bolt	8
42		**⅜" Hardened Washer	16
43		**⅜"-16 UNC Locknut	8
44		**5/16" S-Cam U-bolt	4
45		**5/16" Hardened Washer	16
46		**5/16"-18 UNC Locknut	8
47		Torque Rod Spacer, *see Selection Guide on Page 12*	4
48	65139-003	Axle Spacer - 8½" Ride Height, *PRIMAAX EX 26KS only*	4
49	70867-001	P-80 Bushing Lubricant - 10 ml. (not shown)	per Bushing 1

PRIMAAX EX 26K • 52K

10" Ride Height

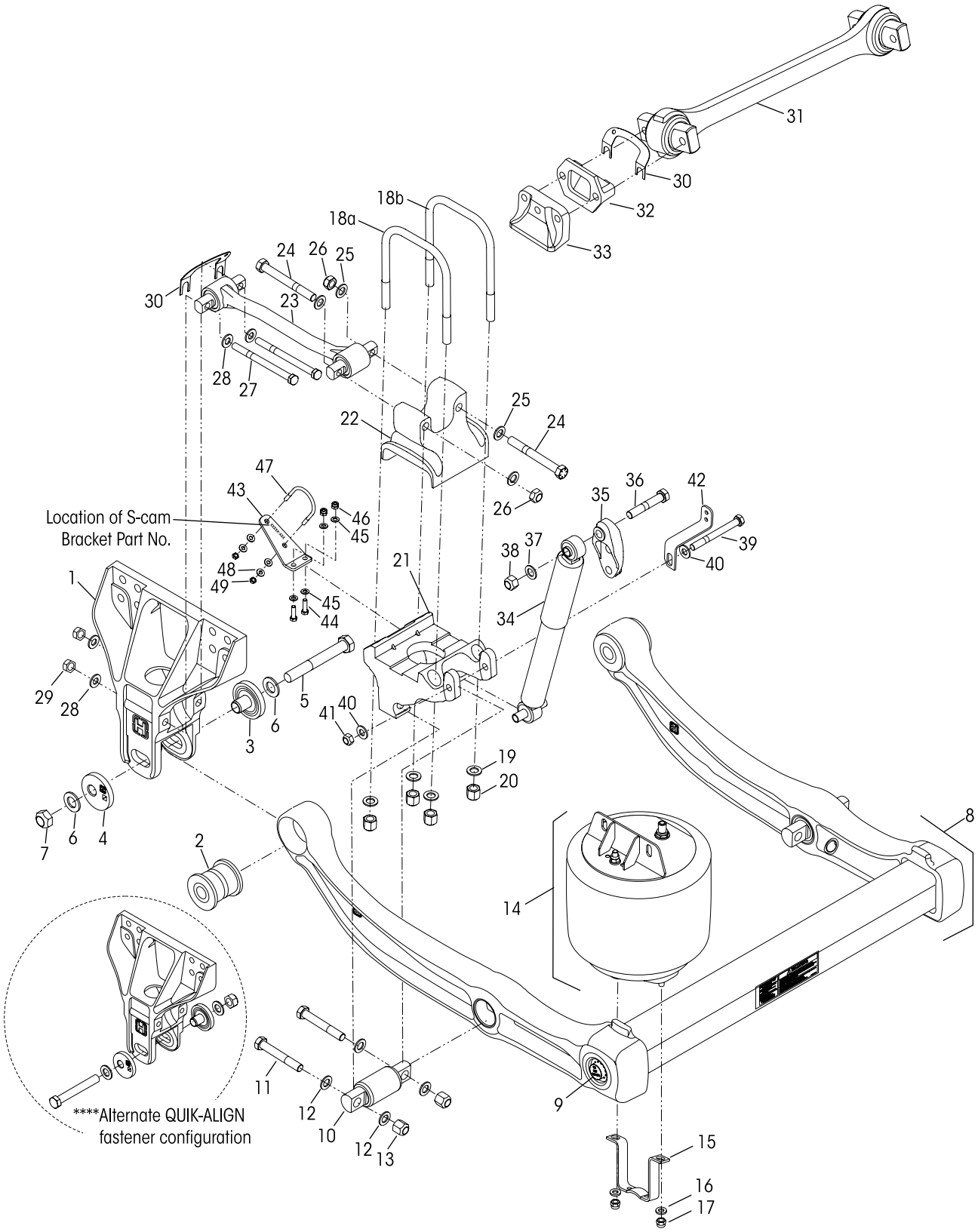

KEY NO.	PART NO.	DESCRIPTION	VEHICLE *QTY.
1	67706-000	EX Frame Hanger	4
		QUIK-ALIGN Pivot Bushing Service Kits, Includes Key Nos. 2-7, 50	
	60961-720	**One Wheel End**	
	60632-020	**Axle Set**	
		QUIK-ALIGN Collar Service Kit, Includes Key Nos. 3-7	
	60632-019	**One Wheel End**	
	60632-021	**Axle Set**	
	60632-018	**QUIK-ALIGN Fastener Service Kit One Wheel End,** Includes Key Nos. 5-7	
2		**QUIK-ALIGN Pivot Bushing	4
3		**QUIK-ALIGN Concentric Collar	4
4		**QUIK-ALIGN Eccentric Collar	4
5		**1"-14 UNF-2A x 7½" Hex Bolt	4
6		**1" H-Coat Flat Washer	8
7		**1"-14 UNF-2B Locknut	4
8		U-beam Assembly, Includes Key Nos. 2, 10	
	67249-006	Front	1
	67249-005	Rear	1
9		**U-beam Assembly Enhancement Aftermarket Service Kit,** *see Page 24 for contents*	
	69565-001	**Axle Set**	
	69565-002	**One Wheel End**	
	34013-114	**Single D-Pin Bushing Service Kit,** Includes Key Nos. 10-13	
10		**D-Pin Bushing	4
	56659-010	**D-Pin Fastener Service Kit, Axle Set,** Includes Key Nos. 11-13	
11		**⅞"-14 UNF x 5" Bolt	8
12		**⅞" Flat Washer	16
13		**⅞"-14 UNF Locknut	8
	60961-744	**Single Air Spring Service Kit,** Includes Key Nos. 14-17	
14	67247-002	Air Spring Assembly, Includes Upper Frame Bracket	4
15	60911-002	Lower Air Spring Mounting Bracket	4
	49177-006	**Lower Air Spring Fastener Service Kit, Single,** Includes Key Nos. 16-17	
16		**½" Flat Washer	8
17		**½"-13 UNC Locknut	8
	48718-120	**U-bolt Service Kit, One Wheel End,** Includes Key Nos. 18a-b, 19-20	
18		**¾" Square U-bolt	8
a		Outboard - Length 10"	
b		Inboard - Length 10½"	

KEY NO.	PART NO.	DESCRIPTION	VEHICLE *QTY.
19		**¾" Flat Washer	16
20		**¾"-16 UNF U-bolt Locknut	16
21	65208-XXX	Bottom Cap, *see Selection Guide on Page 13*	4
22	65210-XXX	Top Pad, *see illustration and Selection Guide on Page 13*	4
23	65302-XXX	Longitudinal Torque Rod Assembly, *see Selection Guide on Page 13*	4
24	21867-007	¾"-16 UNF x 6" Hex Bolt	8
25	22962-001	¾" Flat Washer	16
26	30191-000	¾"-16 UNF Locknut	8
27	32043-016	⅝"-11 UNF x 8" Hex Bolt	8
28	22962-004	⅝" Flat Washer	16
29	47764-000	⅝"-11 UNC Locknut	8
30	49689-000	Shim (As Required)	
31	8240-0000-560	***Transverse TRAAX ROD Assembly *Replaces 72000-560C*	2
32	22186-000	Transverse Torque Rod Frame Bracket	2
33	60593-000	Frame Mounted Axle Stop	4
34	60665-013L	Shock Absorber	4
35	67463-002	Upper Shock Frame Bracket,	4
	50754-029	**Single Shock Fastener Service Kit,** Includes Key Nos. 36-41	
36		**¾"-10 UNC x 4¼" Upper Shock Bolt	4
37		**¾" Flat Washer	4
38		**¾"-10 UNC Locknut	4
39		**⅝"-11 UNC x 7" Lower Shock Bolt	4
40		**⅝" Flat Washer	8
41		**⅝"-11 UNC Locknut	4
42	60921-000	Height Control Valve Linkage Bracket	2
		S-cam Fastener Service Kit, Axle Set,	
	58821-034	Includes Key Nos. 43a, 44-49	
	58821-031	Includes Key Nos. 43b, 44-49	
43		S-cam Support Bracket, *see part number on component*	4
a	64508-005	For Dana Axle	
b	64508-003	For Meritor Axle	
44		**⅜"-16 UNC x 1½" Hex Bolt	8
45		**⅜" Hardened Washer	16
46		**⅜"-16 UNC Locknut	8
47		**5/16" S-Cam U-bolt	4
48		**5/16" Hardened Washer	16
49		**5/16"-18 UNC Locknut	8
50	70867-001	P-80 Bushing Lubricant - 10 ml. (not shown)	per Bushing 1

Pro Gear and Transmission • 906 W. Gore St. Orlando, FL 32805 • 1 (877) 776-4600 / (407) 872-1901 • parts@eprogear.com

PRIMAAX EX 23KT • 26KT

T – designates Tall Ride Height

15½" Ride Height

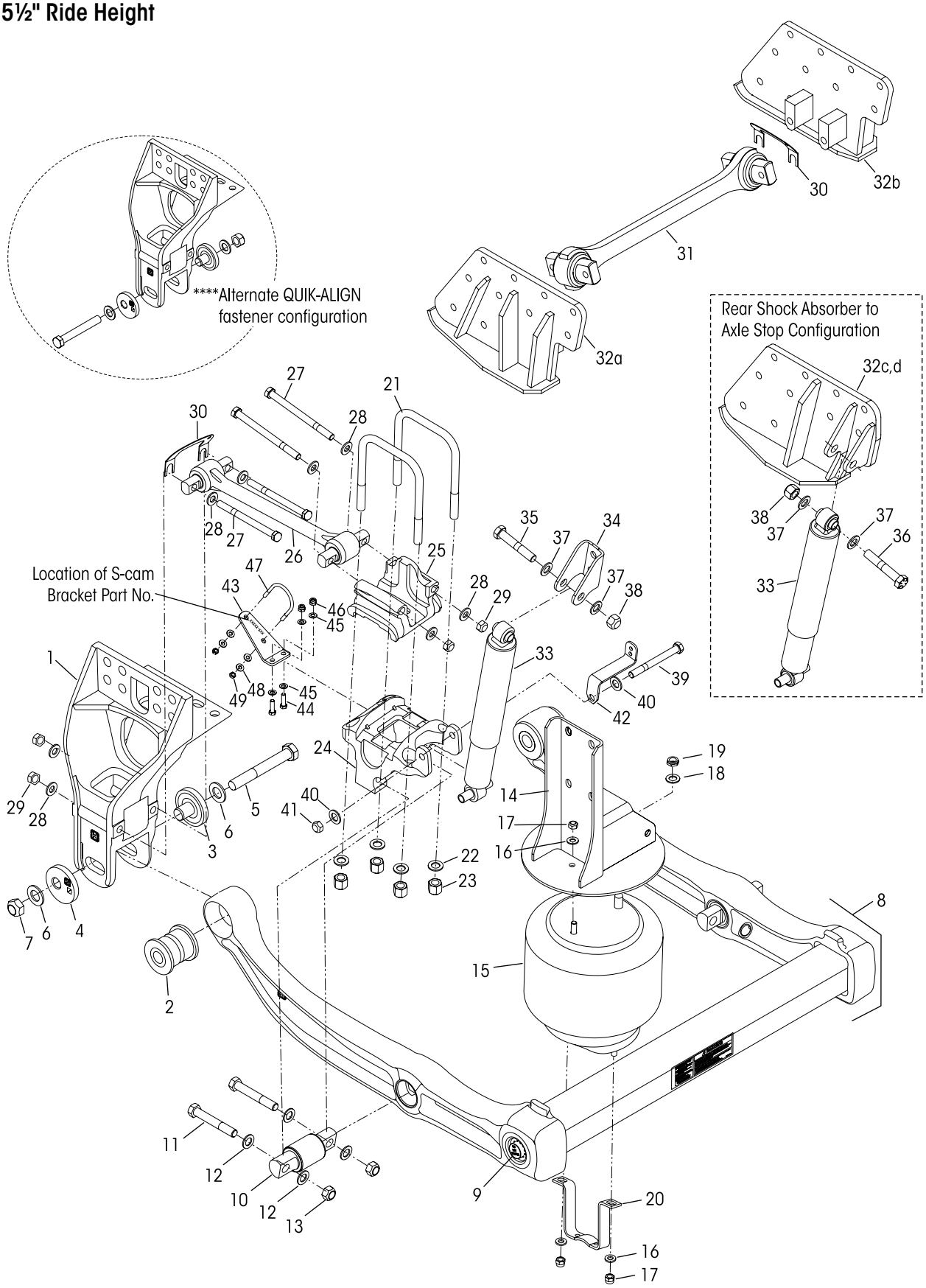

KEY NO.	PART NO.	DESCRIPTION	VEHICLE *QTY.
1		Frame Hanger	
	67299-001	Left Hand	1
	67299-002	Right Hand	1
		QUIK-ALIGN Pivot Bushing Service Kits, Includes Key Nos. 2-7, 50	
	60961-720	**One Wheel End**	
	60632-020	**Axle Set**	
		QUIK-ALIGN Collar Service Kit, Includes Key Nos. 3-7	
	60632-019	**One Wheel End**	
	60632-021	**Axle Set**	
	60632-018	**QUIK-ALIGN Fastener Service Kit One Wheel End,** Includes Key Nos. 5-7	
2		**QUIK-ALIGN Pivot Bushing	4
3		**QUIK-ALIGN Concentric Collar	4
4		**QUIK-ALIGN Eccentric Collar	4
5		**1"-14 UNF-2A x 7½" Hex Bolt	4
6		**1" H-Coat Flat Washer	8
7		**1"-14 UNF-2B Locknut	4
8	67249-004	U-beam Assembly, Includes Key Nos. 2, 10	1
9		**U-beam Assembly Enhancement Aftermarket Service Kit,** *see Page 24 for contents*	
	69565-001	**Axle Set**	
	69565-002	**One Wheel End**	
	34013-117	**Single D-Pin Bushing Service Kit,** Includes Key Nos. 10-13	
10		**D-Pin Bushing	2
	56659-012	**D-Pin Fastener Service Kit, Axle Set,** Includes Key Nos. 11-13	
11		**¾"-16 UNF x 4¾" Bolt	4
12		**¾" Flat Washer	16
13		**¾"-16 UNF Locknut	8
14		Upper Air Spring Bracket Assembly	2
	69932-002	23KT	
	69932-003	26KT	
		Single Air Spring Assembly Service Kit, Includes Key Nos. 15-20	
	69951-003	23KT	
	69882-003	26KT	
15		Air Spring Assembly	2
	67391-002	23KT	
	67044-002	26KT	
		Air Spring Fastener Service Kits, Single,	
	49177-006	Lower, Includes Key Nos. 16-17	
	49177-023	Upper/Lower, Includes Key Nos. 16-19	
16		**½" Flat Washer	8
17		**½"-13 UNC Locknut	8
18		**¾" Flat Washer	2
19		**¾"-16 UNF Locknut	2
20	60911-002	Lower Air Spring Mounting Bracket	2

KEY NO.	PART NO.	DESCRIPTION	VEHICLE *QTY.
	48718-129	**U-bolt Service Kit, One Wheel End,** Includes Key Nos. 21-23	
21		**¾" Square U-bolt - Length 8⅞"	4
22		**¾" Flat Washer	16
23		**¾"-16 UNF U-bolt Locknut	16
24	60556-025	Bottom Cap	2
25	65289-000	Top Pad	2
26	62011-415N	Longitudinal Torque Rod Assembly	2
	49176-032	**Longitudinal Torque Rod Bolt Service Kit, One Torque Rod,** Includes Key Nos. 27-29	
27		**⅝"-11 UNC-2B x 8" Bolt	16
28		**⅝" Flat Washer	32
29		**⅝"-11 UNC-2A Locknut	16
30	49689-000	Shim (As Required)	
31	8240-0000-560	***Transverse TRAAX ROD Assembly *Replaces 72000-560C*	1
32		Axle Stop	
a	70171-000	Left Hand Front	1
b	70172-000	Right Hand Front	1
c	70173-000	Left Hand Rear, Includes Upper Shock Bracket	1
d	70174-000	Right Hand Rear, Includes Upper Shock Bracket	1
33	60665-011L	Shock Absorber	2
34	59423-001	Upper Shock Frame Bracket, Front Axle	2
		Single Shock Fastener Service Kit,	
	34013-327	Front, works with Key No. 32a,32b, Includes Key Nos. 35, 37-41	
	50754-030	Rear, works with Key Nos. 32c, 32d, Includes Key Nos. 36-41	
35		**¾"-10 UNC x 3¾" Upper Shock Bolt	2
36		**¾"-10 UNC x 4¼" Upper Shock Bolt	2
37		**¾" Flat Washer	4
38		**¾"-10 UNC Locknut	2
39		**⅝"-11 UNC x 6" Lower Shock Bolt	2
40		**⅝" Flat Washer	4
41		**⅝"-11 UNC Locknut	2
42	60921-000	Height Control Valve Linkage Bracket	1
43	64508-XXX	S-cam Support Bracket, *see part number on component*	2
	58821-017	**S-cam Fastener Service Kit, Axle Set,** Includes Key Nos. 44-49	
44		**⅜"-16 UNC x 1¼" Hex Bolt	8
45		**⅜" Hardened Washer	16
46		**⅜"-16 UNC Locknut	8
47		**5/16" S-Cam U-bolt	4
48		**5/16" Hardened Washer	16
49		**5/16"-18 UNC Locknut	8
50	70867-001	P-80 Bushing Lubricant - 10 ml. (not shown)	per Bushing 1

PRIMAAX 230 • 460 • 690

Built Prior to March 2009

10" Ride Height

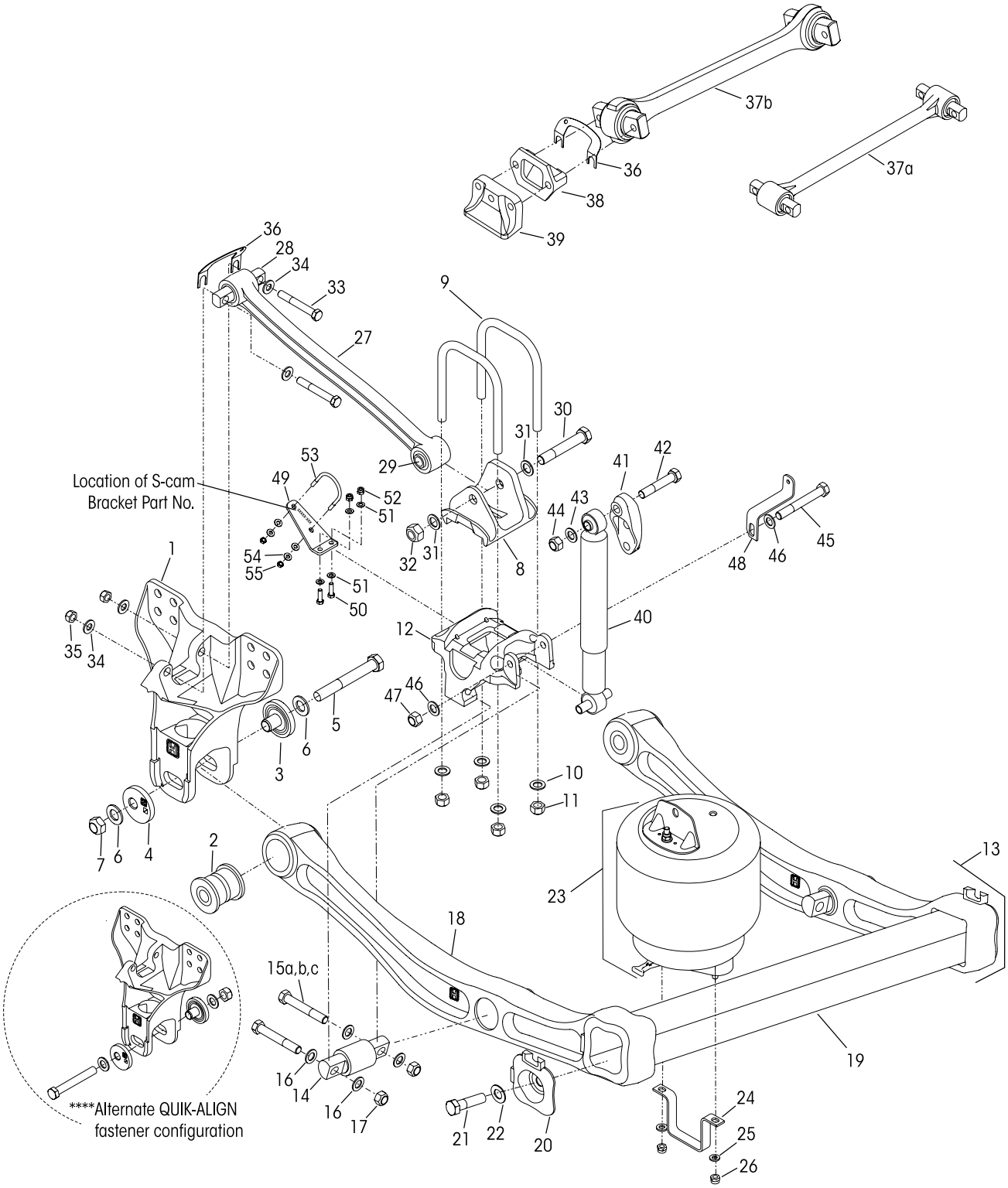

KEY NO.	PART NO.	DESCRIPTION	VEHICLE *QTY.
1	60821-001	Frame Hanger	4
		QUIK-ALIGN Pivot Bushing Service Kits, Includes Key Nos. 2-7, 56	
	60961-720	**One Wheel End**	
	60632-020	**Axle Set**	
		QUIK-ALIGN Collar Service Kit, Includes Key Nos. 3-7	
	60632-019	**One Wheel End**	
	60632-021	**Axle Set**	
	60632-018	**QUIK-ALIGN Fastener Service Kit One Wheel End,** Includes Key Nos. 5-7	
2		**QUIK-ALIGN Pivot Bushing	4
3		**QUIK-ALIGN Concentric Collar	4
4		**QUIK-ALIGN Eccentric Collar	4
5		**1"-14 UNF-2A x 7½" Hex Bolt	4
6		**1" H-Coat Flat Washer	8
7		**1"-14 UNF-2B Locknut	4
8	60877-001	Top Pad	4
	48718-108	**U-bolt Service Kit, One Wheel End,** Includes Key Nos. 9-11	
9		**¾" Square U-bolt - Length 8⅞"	8
10		**¾" Flat Washer	16
11		**¾"-16 UNF U-bolt Locknut	16
12	60556-XXX	Bottom Cap, *see Selection Guide on Page 12*	4
13		U-beam Assembly, Includes Key Nos. 2, 14, 18-19 *(Replaces previous U-beam assembly, support beam and cross tube assembly, see Table 1 below)*	
		Single D-pin Bushing Service Kit	
	34013-107	Includes Key Nos. 14, 15a, 16-17	
	34013-116	Includes Key Nos. 14, 15b, 16-17	
	34013-117	Includes Key Nos. 14, 15c, 16-17	
14		**D-Pin Bushing	4
		D-Pin Fastener Service Kit, Axle Set	
	56659-009	Includes Key Nos. 15a, 16-17	
	56659-013	Includes Key Nos. 15b, 16-17	
	56659-012	Includes Key Nos. 15c, 16-17	
15		**¾"-16 UNF Bolt	8
a		Length 5"	
b		Length 5½"	
c		Length 4¾"	
16		**¾" Flat Washer	16
17		**¾"-16 UNF Locknut	8
18		Support Beam Assembly *(66435-XXX, No longer available, see Table 1 below)*	
19		Cross Tube *(60912-001, No longer available, see Table 1 below)*	
	46772-001	**End Cap and Fastener Kit, Axle Set,** Includes Key Nos. 20-22	
20		**End Cap	4
21		**⅞"-9 UNC x 3½" Hex Bolt	4
22		**⅞" H-Coat Flat Washer	4
	60961-062	**Single Air Spring Service Kit,** Includes Key Nos. 23-26	

KEY NO.	PART NO.	DESCRIPTION	VEHICLE *QTY.
23	60271-002L	Air Spring Assembly, Includes Upper Frame Bracket	4
24	60911-000	Lower Air Spring Mounting Bracket	4
	49177-006	**Lower Air Spring Fastener Service Kit, Single,** Includes Key Nos. 25-26	
25		**½" Flat Washer	8
26		**½"-13 UNC Locknut	8
27		Longitudinal Torque Rod Assembly, Includes Key Nos. 28-29, *see Selection Guide on Page 12*	4
28	69210-000H	Bushing - Straddle Bar Pin - ¾" Holes	4
29	47692-000L	Torque Rod Bushing - Thru Holes	4
		Longitudinal Torque Rod Fastener Kit	
	49176-008	**Axle Set,** Includes Key Nos. 30-35	
	58821-012	**Single,** Thru Bolt Connection, Includes Key Nos. 30-32	
30		**⅞"-14 UNF-2A x 5½" Hex Bolt	4
31		**⅞" H-Coat Flat Washer	8
32		**⅞"-14 UNF-2B Locknut	4
33		**¾"-16 UNF-2A x 3¾" Hex Bolt	8
34		**¾" Flat Washer	16
35		**¾"-16 UNF-2B Locknut	8
36	49689-000	Shim (As Required)	
37		***Transverse Torque Rod Assembly	2
a	62000-565N	ULTRA ROD, *Replaces 62000-565, 67428-565*	
b	8240-0000-560	TRAAX ROD, *Replaces 72000-560C*	
38	22186-000	Transverse Torque Rod Frame Bracket	2
39	60593-000	Frame Mounted Axle Stop	4
40	60657-017L	Shock Absorber *Replaces 60657-005, 60657-003*	4
41	67463-002	Upper Shock Frame Bracket, *Replaces 65000-002*	4
	50754-030	**Single Shock Fastener Service Kit,** Includes Key Nos. 42-47	
42		**¾"-10 UNC x 4¼" Upper Shock Bolt	4
43		**¾" Flat Washer	4
44		**¾"-10 UNC Locknut	4
45		**⅝"-11 UNC x 6" Lower Shock Bolt	4
46		**⅝" Flat Washer	8
47		**⅝"-11 UNC-2B Locknut	4
48	60921-000	Height Control Valve Linkage Bracket	1
49	64508-000	S-cam Support Bracket, *see part number on component*	4
	58821-017	**S-cam Fastener Service Kit, Axle Set,** Includes Key Nos. 50-55	
50		**⅜"-16 UNC x 1¼" Hex Bolt	8
51		**⅜" Hardened Washer	16
52		**⅜"-16 UNC Locknut	8
53		**5/16" S-Cam U-bolt	4
54		**5/16" Hardened Washer	16
55		**5/16"-18 UNC Locknut	8
56	70867-001	P-80 Bushing Lubricant - 10 ml. (not shown)	per Bushing 1

TABLE 1

Key Nos. 13, 18 & 19		Discontinued			New
		Support Beam Assembly Part Number 60831-00X • 66435-00X		Cross Tube Part Number	U-Beam Assembly Service Kit Number
Ride Height	Drive Axle	Left Hand	Right Hand		
8.5"-10.0"	Forward	-003	-004	60912-001	**60961-235**
	Rear	-001	-002		**60961-236**

PRIMAAX® 260 • 520

Built Prior to March 2009

10" Ride Height

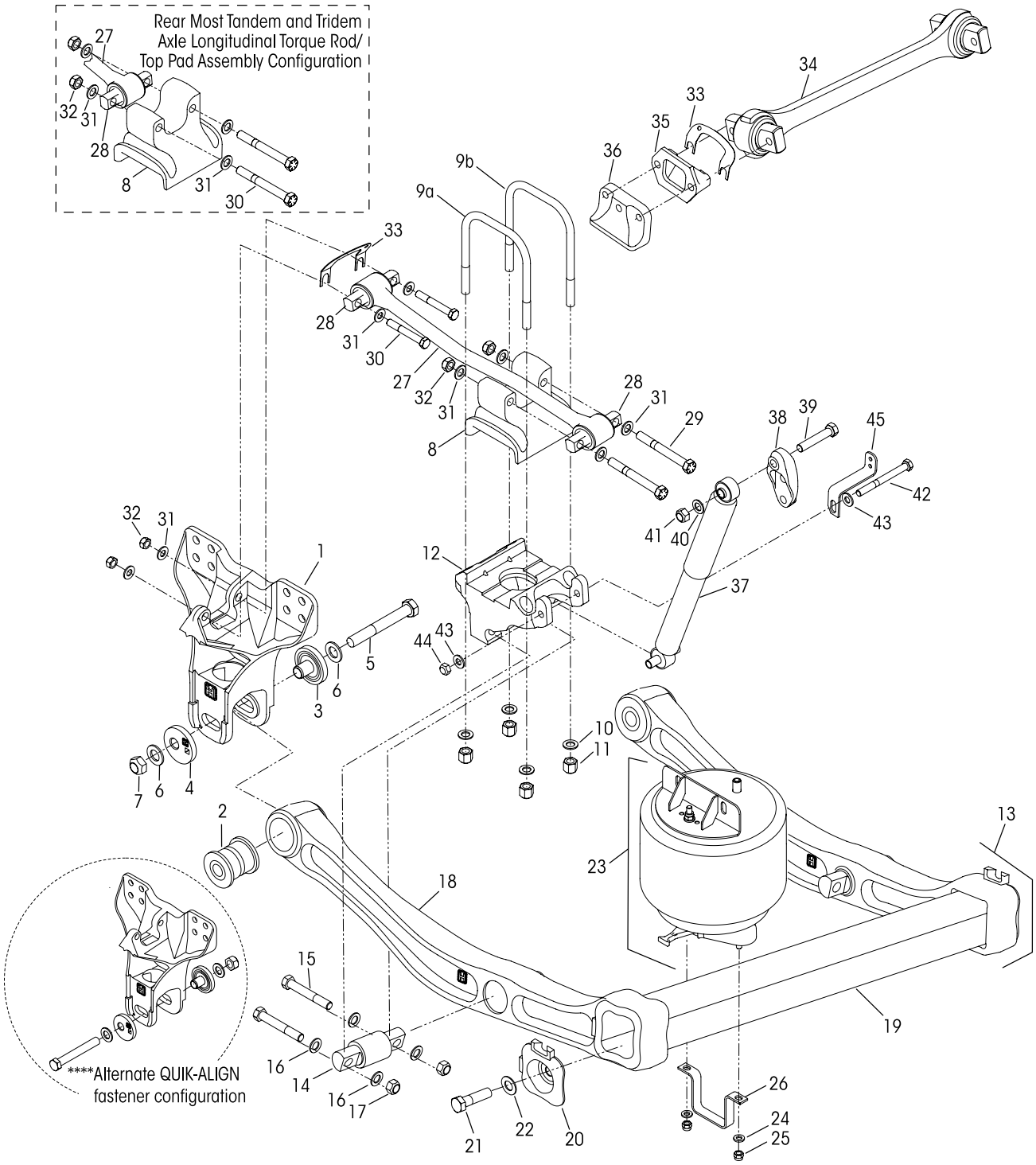

KEY NO.	PART NO.	DESCRIPTION	VEHICLE *QTY.
1	60821-001	Frame Hanger	4
		QUIK-ALIGN Pivot Bushing Service Kits, Includes Key Nos. 2-7, 46	
	60961-720	**One Wheel End**	
	60632-020	**Axle Set**	
		QUIK-ALIGN Collar Service Kit, Includes Key Nos. 3-7	
	60632-019	**One Wheel End**	
	60632-021	**Axle Set**	
	60632-018	**QUIK-ALIGN Fastener Service Kit One Wheel End,** Includes Key Nos. 5-7	
2		**QUIK-ALIGN Pivot Bushing	4
3		**QUIK-ALIGN Concentric Collar	4
4		**QUIK-ALIGN Eccentric Collar	4
5		**1"-14 UNF-2A x 7½" Hex Bolt	4
6		**1" H-Coat Flat Washer	8
7		**1"-14 UNF-2B Locknut	4
8		Top Pad, *see Illustration on Page 13*	4
	65210-001	Meritor Straight Side	
	65210-002	Dana Straight Side	
	65210-003	Meritor Transition Side	
	65210-004	Dana Transition Side	
	48718-120	**U-bolt Service Kit, One Wheel End,** Includes Key Nos. 9a-9b, 10-11	
9		**¾" Square U-bolt	8
a		Outboard - Length 10"	
b		Inboard - Length 10½"	
10		**¾" Flat Washer	16
11		**¾"-16 UNF U-bolt Locknut	16
12	65208-XXX	Bottom Cap, *see Selection Guide on Page 13*	4
13		U-beam Assembly, Includes Key Nos. 2,14,18-19 *(Replaces previous U-beam assembly, support beam and cross tube assembly, see Table 1 below)*	
	34013-114	**Single D-Pin Bushing Service Kit,** Includes Key Nos. 14-17	
14		**D-Pin Bushing	4
	56659-010	**D-Pin Fastener Service Kit, Axle Set,** Includes Key Nos. 15-17	
15		**⅞"-14 UNF x 5" Bolt	8
16		**⅞" Flat Washer	16
17		**⅞"-14 UNF Locknut	8
18		Support Beam Assembly *(66435-XXX, No longer available, see Table 1 below)*	
19		Cross Tube *(60912-001, No longer available, see Table 1 below)*	

KEY NO.	PART NO.	DESCRIPTION	VEHICLE *QTY.
	46772-001	**End Cap and Fastener Kit, Axle Set,** Includes Key Nos. 20-22	
20		**End Cap	4
21		**⅞"-9 UNC x 3½" Hex Bolt	4
22		**⅞" H-Coat Flat Washer	4
	60961-118	**Single Air Spring Service Kit,** Includes Key Nos. 23-26	
23	66255-002	Air Spring Assembly, Includes Upper Frame Bracket and Fasteners	4
	49177-006	**Lower Air Spring Fastener Service Kit, Single,** Includes Key Nos. 24-25	
24		**½" Flat Washer	12
25		**½"-13 UNC Locknut	12
26	60911-000	Lower Air Spring Mounting Bracket	4
27	66359-XXX	Longitudinal Torque Rod Assembly, *see Selection Guide on Page 13*	4
28	69210-000H	Bushing - Straddle Bar Pin (¾" Holes)	8
	49176-017	**Torque Rod Fastener Service Kit, Axle Set,** Includes Key No. 29-32	
29		**¾"-16 UNF x 6" Hex Bolt	8
30		**¾"-16 UNF x 3¾" Hex Bolt	8
31		**¾" Flat Washer	32
32		**¾"-16 UNF Locknut	16
33	49689-000	Shim (As Required)	
34	8240-0000-560	***Transverse TRAAX ROD Assembly *Replaces 72000-560C*	2
35	22186-000	Transverse Torque Rod Frame Bracket	2
36	60593-000	Frame Mounted Axle Stop	4
37		Shock Absorber	4
	60665-013L	For vehicles with Drum Brakes only	
	60665-015L	For vehicles with Disc Brakes only	
38	67463-002	Upper Shock Frame Bracket, *Replaces 65000-002*	4
	50754-029	**Single Shock Fastener Service Kit,** Includes Key Nos.39-44	
39		**¾"-10 UNC x 4¼" Upper Shock Bolt	4
40		**¾" Flat Washer	4
41		**¾"-10 UNC Locknut	4
42		**⅝"-11 UNC x 7" Lower Shock Bolt	4
43		**⅝" Flat Washer	8
44		**⅝"-11 UNC Locknut	4
45	60921-000	Height Control Valve Linkage Bracket	2
46	70867-001	P-80 Bushing Lubricant - 10 ml. (not shown)	per Bushing 1

TABLE 1

Key Nos. 13, 18 & 19

		Discontinued			New
		Support Beam Assembly Part Number 60831-00X • 66435-00X		Cross Tube Part Number	U-Beam Assembly Service Kit Number
Ride Height	Drive Axle	Left Hand	Right Hand		
8.5"-10.0"	Forward	-007	-008	60912-001	**60961-253**
	Rear	-005	-006		**60961-254**
	+	-001	-002		**60961-718++**

NOTES: + PRIMAAX 260 single axle only. Use with Dana S26-190 axle.

++ Upper air spring bracket not included. The original bracket equipped on this vehicle can be used with the new air spring assembly included in the U-beam assembly service kit.

■ PRIMAAX EX • PRIMAAX Series Severe Service Kits

Severe Service Kit No. 60632-033 | QUIK-ALIGN Pivot Bushing Axle Set

Reference Lit. No. 59310-037

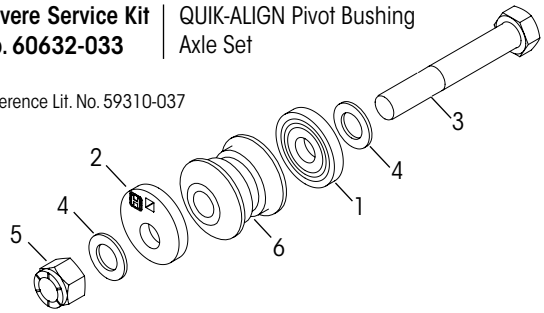

KIT NO. 60632-033
PRIMAAX EX • PRIMAAX – 8½"-10" Ride Height

KEY NO.	CONTENTS	KIT QTY.
1	QUIK-ALIGN Concentric Collar	2
2	QUICK-ALIGN Eccentric Collar	2
3	1¼"-12 UNF x 8" Bolt	2
4	1¼" Hardened Washer	4
5	1¼"-12 UNF Nylocknut	2
6	QUIK-ALIGN Pivot Bushing	2
7	P-80 Bushing Lubricant - 10 ml. (per Bushing 1)	2

Severe Service Kit No. 60632-015 | QUIK-ALIGN Collar Axle Set

Reference Lit. No. 59310-037

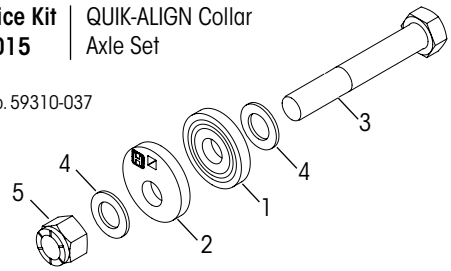

KIT NO. 60632-015
PRIMAAX EX • PRIMAAX – 8½"-10" Ride Height

KEY NO.	CONTENTS	KIT QTY.
1	QUIK-ALIGN Concentric Collar	2
2	QUICK-ALIGN Eccentric Collar	2
3	1¼"-12 UNF x 8" Bolt	2
4	1¼" Hardened Washer	4
5	1¼"-12 UNF Nylocknut	2

Severe Service Kit No. 58821-026 | Top Pad Fasteners Axle Set

Reference Lit. No. 59310-036

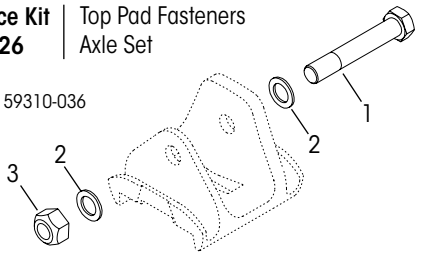

KIT NO. 58821-026
PRIMAAX 230 • 460 • 690 – 8½"-10"-12½"-14⅜"-15½" Ride Height
Does not include Top Pad

KEY NO.	CONTENTS	KIT QTY.
1	M24 x 3-6G H-coat Hex Bolt	2
2	M24 Hardened Washer	4
3	M24 x 3-6H Locknuts	2

■ U-beam Assembly Enhancement Aftermarket Service Kit

PRIMAAX EX Series **U-beam Assembly Enhancement Aftermarket Service Kit No. 69565-001, Axle Set**

Part Number	Description	Qty.	Comments
69351-000	Sikaflex 221 Polyurethane Sealant, 300 ml Tube	1	In the event any service to the suspension requiring disassembly of a U-beam assembly equipped with integrated end caps, the Loctite 277, tamper resistant caps and Sikaflex 221 polyurethane sealant must be properly installed to ensure components function to their highest efficiency.
69570-000	Loctite® 277 - 10 ml Bottle	1	
	*Tamper Resistant Cap	2	
	*⅞"-9 UNC x 3¾" Hex Bolt	2	
	*⅞" Hardened Washer	2	

NOTE: * Item included in kit/assembly only, part not sold separately.

NOTES: * Quantities specified are shown for tandem suspension. Adjust quantities for single or tridem suspensions. Quantities of service kit components may vary from amount shown in lists.

** Item included in kit/assembly only, part not sold separately.

*** Transverse torque rods are equipped with non-serviceable bushings. Transverse torque rods are mandatory for the PRIMAAX EX • PRIMAAX suspensions regardless of axle spacing, see Literature Nos. 59310-004/59310-058 for more information.

**** Alternate configuration of the QUIK-ALIGN fasteners shown in exploded view. The locknuts located inboard will allow additional clearance for wider tires or tires with chains. Tightening is still required ONLY on the locknut.

SECTION 6
Preventive Maintenance

Following appropriate inspection procedures is important to help ensure the proper maintenance and operation of the suspension system and component parts function to their highest efficiency. Hendrickson recommends the PRIMAAX EX • PRIMAAX heavy-duty rear suspensions be inspected at pre-delivery, the first 1,000 miles of service and at the regular preventive maintenance intervals. Off-highway and severe service operating conditions require more frequent inspections than on-highway service operation.

NOTE Torque values shown in this publication apply only if Hendrickson supplied fasteners are used. If non Hendrickson fasteners are used, follow the torque specifications listed in the vehicle manufacturer's service manual.

AREAS OF INSPECTION

- ■ Air springs
- ● Air supply and fittings
- ● All fasteners
- ■ Clamp group
- ● Frame hanger bracket
- ● Height control valve
- ● Longitudinal Torque rods
- ■ QUIK-ALIGN® connections
- ● S-cam support tube bracket (if equipped)
- ● Shock absorbers
- ● Tire wear
- ● Top pad
- ■ Transverse Torque rods
- ■ U-beam assembly: Cross tube / Support beam / End cap (enhanced or detachable)
- ● U-bolt locknuts

■ Signifies performance critical components group

HENDRICKSON RECOMMENDED INSPECTION INTERVALS	PRE-DELIVERY INSPECTION	FIRST IN-SERVICE INSPECTION	PREVENTIVE MAINTENANCE
Visual inspection for proper assembly and function. Check for all of the following and replace components as necessary: • Signs of unusual movement, loose or missing components • Signs of abrasive or adverse contact with other components • Damaged, or cracked parts • Improper suspension function or alignment	Within the first **500 miles** (500 km)	Within the first **1,000 miles** (1,600 km) or 100 hours	**OFF-HIGHWAY** every 6 months / 1,200 hours or 25,000 miles / 40,000 km, whichever comes first **ON-HIGHWAY** every 12 months or 50,000 miles, whichever comes first
Visually inspect the overall condition of and for any signs of damage to: • U-beam assembly • Air springs and air lines			
Inspect fasteners for proper torque as recommended in the Torque Specifications Section of this publication: • QUIK-ALIGN fasteners and Torque rod to top pad fasteners, see Figure 6-1 • Clamp group U-bolt fasteners, see Figure 6-2 • **DO NOT** re-torque Integrated End Cap, see Figure 6-3 • Transverse torque rod fasteners, see vehicle manufacturer's torque specifications			Every 12 months / 2400 hours
Verify the lateral alignment of the drive axles are within the vehicle manufacturer's tolerances			
Verify ride height. Refer to the vehicle manufacturer for proper specifications and procedure.			

See vehicle manufacturer's applicable publications for other preventive maintenance requirements.

NOTE Figures 6-1 and 6-2 illustrate basic connections for PRIMAAX EX and Figure 6-3 illustrates U-beam connections for PRIMAAX EX and PRIMAAX.

FIGURE 6-1

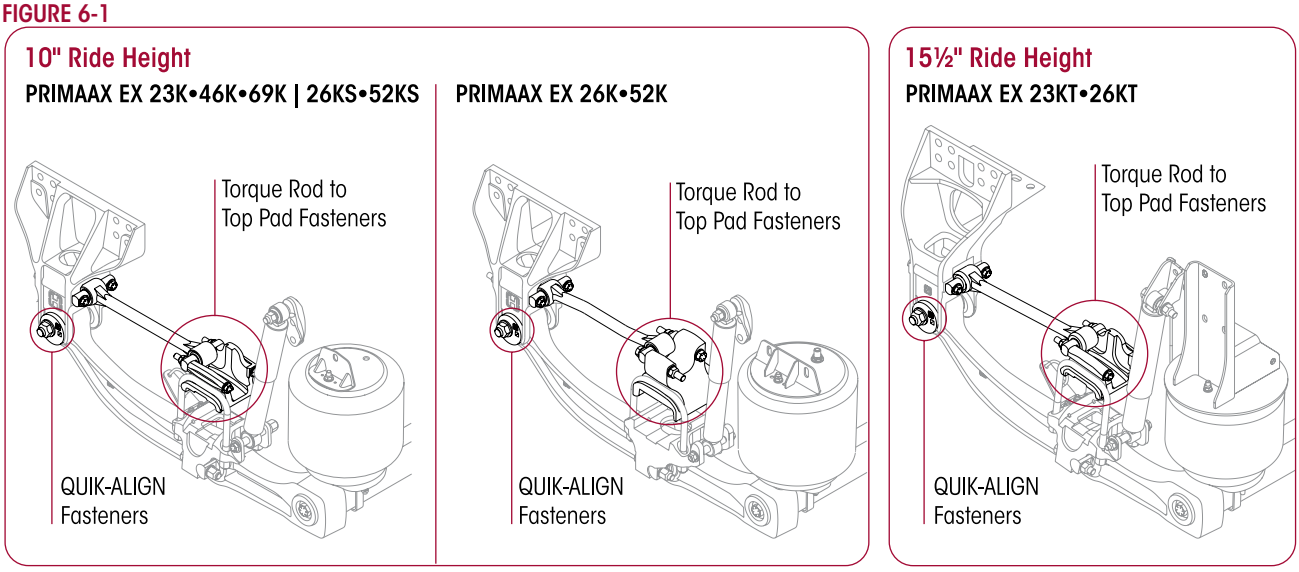

FIGURE 6-2

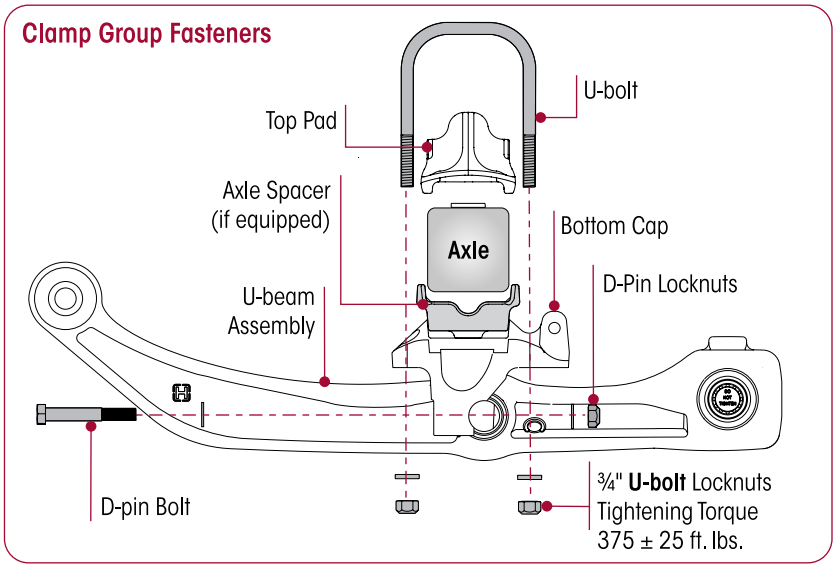

FIGURE 6-3

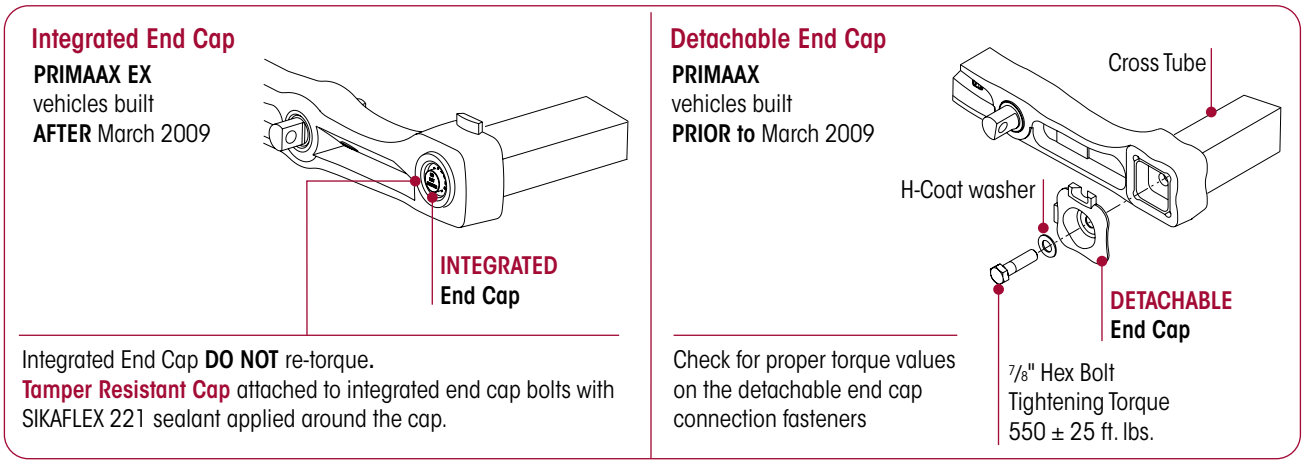

COMPONENT INSPECTION

IMPORTANT NOTE Replace all worn or damaged parts.

- **Air spring** — Visually inspect the outer surface of the air spring for chafing, uneven wear, cracks or any signs of component damage. Ensure that the upper bead plate is tight against the underside of the frame. Check for any lateral slippage at the lower air spring bracket. An ⅛" of slippage in either direction is acceptable. Verify all mounting hardware have the proper torque values maintained. See the Torque Specifications Section of this publication for recommended torque requirements.
- **Air supply (Pneumatic components)** — The air supply to the system plays a large role in the air springs' performance. Inspect, clean and replace, if necessary, any support products to the air springs, valves, regulators and air lines. See Air Fittings in this section for proper inspection.
- **Clamp group** — Visually inspect for any loose or damaged fasteners. Verify the U-bolt locknuts have the proper torque values maintained. See the U-bolt Locknuts in this section.
- **Cross tube** — Visually inspect for cracks, damage, metal shavings, or looseness at the beam connection.
- **End cap** (if equipped, vehicles built prior to March 2009) – Visually inspect the end cap connection for signs of movement or damage. Verify the support beam/cross tube connection bolts have the proper torque values maintained. See the Torque Specifications Section of this publication for recommended torque requirements.
- **Fasteners** — Visually inspect for any loose or damaged fasteners on the entire suspension. Make sure all fasteners are tightened to a torque value within the specified torque range. See Torque Specifications Section in this publication for recommended torque requirements. Use a calibrated torque wrench to check torque in a tightening direction. As soon as the fastener starts to move, record the torque and correct the torque if necessary.
- **Frame hanger** — Visually inspect for any signs of loose fasteners, movement, or damage. Verify the frame attaching fasteners have the proper torque values maintained. See the vehicle manufacturer for proper torque specifications.
- **Height control valve and air lines** — Check the suspension air system for air leaks. Check all air lines for proper routing. Check for chafing or pinched air lines. Check the height control valve linkage for damage or interference with peripheral components.
- **QUIK-ALIGN connection** — Visually inspect the connection for signs of looseness or movement. Visually inspect the bushing for wear. Verify the connections have the proper torque values maintained. See the Torque Specifications Section of this publication for recommended torque requirements.

  Refer to QUIK-ALIGN Fasteners Warnings in the Important Safety Notice Section of this publication prior to installing QUIK-ALIGN connection.
- **S-Cam support tube bracket** (If equipped) — Visually inspect the bracket for damage and check for any loose or damaged fasteners.
- **Shock absorbers** — Visually inspect for any signs of dents or leakage. Misting is not considered a leak, see Shock Absorbers in this section for proper inspection.
- **Tire wear** — Visually inspect the tires for wear patterns that may indicate suspension damage or misalignment.
- **Top pad/Longitudinal torque rod connection** — Visually inspect the connection for signs of movement or damage. Use a lever check to help assess movement in this joint, see Longitudinal and Transverse Torque Rods in this section for proper inspection. Verify the top pad/longitudinal torque rod connections have the proper torque values maintained. See the Torque Specifications Section of this publication for recommended torque requirements.

- **Torque rods (longitudinal and transverse)** — All torque rods must be inspected for looseness, torn or shredded rubber and for proper fastener torque. If there is metal-to-metal contact in the bushing joint, this is a sign of excessive bushing wear and the torque rod needs to be serviced, see Longitudinal and Transverse Torque Rod inspection in this section.

NOTE TRAAX ROD and some ULTRA ROD torque rod assemblies (with the suffix **N** after the part number, i.e. 62000-565N) equipped on the PRIMAAX EX • PRIMAAX suspension are not re-bushable. The entire torque rod assembly must be replaced. This feature provides superior bushing retention in the torque rod end hub.

- **U-beam assembly** — Visually inspect the overall condition of the support beam for dents, dings, or other damage on the outer edges of the beam flanges. Visually inspect the D-pin bushings for tearing or extreme bulging. Check for any metal-to-metal contact in the bushed joints.
- **Wear and damage** — Visually inspect all parts of the suspension for wear and damage. Look for bent or cracked parts.

See vehicle manufacturer's applicable publications for other preventive maintenance requirements.

U-BOLT LOCKNUTS

NOTE U-bolt clamp group hardware for the PRIMAAX EX • PRIMAAX suspensions are ¾"-16 UNF Grade C locknuts and ¾"-16 UNF Grade 8 U-bolts which are phosphate and oil coated.

FIGURE 6-4

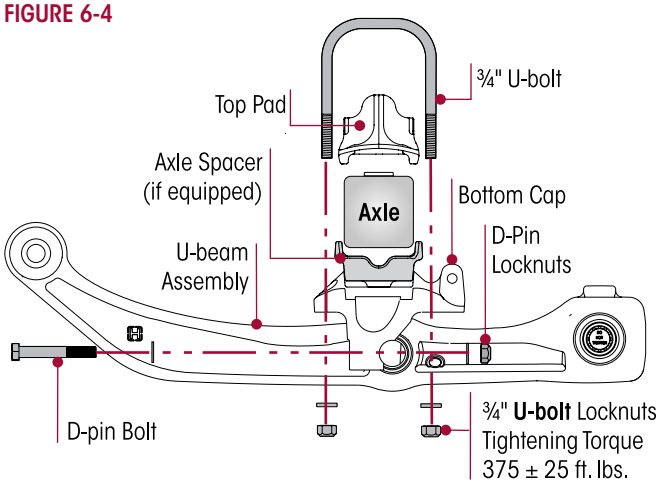

1. U-bolt locknuts must be torqued to specification at preparation for delivery.
2. U-bolt locknuts must be re-torqued at 1,000 miles.
3. Thereafter, follow the inspection and re-torque intervals below:
   - **Off-highway and severe service** – Every 25,000 miles or 6 months, whichever comes first
   - **100% On-highway** – Every 50,000 miles or 12 months, whichever comes first

Off-highway and severe service operating conditions require more frequent inspections than on-highway service operation.

SERVICE HINT Due to certain pinion angle configurations, the removal of the D-pin bolts may be necessary to access the U-bolt locknuts, see Figure 6-4.

WARNING

IT IS IMPORTANT THAT THE U-BOLT CLAMP GROUP CONNECTION BE PROPERLY ALIGNED AND HAVE THE PROPER TORQUE VALUES MAINTAINED. METAL SURFACES CAN WORK AND WEAR AGAINST OTHER RELATED CLAMP GROUP COMPONENTS IF NOT PROPERLY ALIGNED OR PROPERLY TIGHTENED TO MAINTAIN THE PROPER CLAMP FORCE. FAILURE TO DO SO CAN CAUSE PREMATURE COMPONENT WEAR, POSSIBLE SEPARATION OF THE CLAMP GROUP, CAUSING ADVERSE VEHICLE HANDLING, PROPERTY DAMAGE, OR PERSONAL INJURY.

FIGURE 6-5

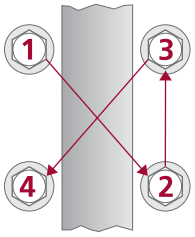

4. Tighten the U-bolt locknuts evenly in 50 foot pounds increments to 375 ± 25 foot pounds torque in the proper pattern to achieve uniform bolt tension, see Figures 6-5.

PIVOT BUSHING AND D-PIN BUSHING

WARNING

THE PIVOT BUSHING AND THE D-PIN BUSHING ARE CRITICAL COMPONENTS OF THE PRIMAAX EX • PRIMAAX SUSPENSIONS. IF ANY SUCH COMPONENTS APPEAR DAMAGED OR WORN THE COMPONENT MUST BE REPLACED. FAILURE TO REPLACE SUCH WORN OR DAMAGED COMPONENTS CAN RESULT IN THE DEFORMATION OF PARTS, LOSS OF CLAMP FORCE, BOLT FAILURE, LOSS OF THE AXLE'S ALIGNMENT, ADVERSE VEHICLE HANDLING, PROPERTY DAMAGE, OR PERSONAL INJURY.

There are two types of pivot bushing inspections for the PRIMAAX EX • PRIMAAX suspension. The pivot bushing can be visually inspected by looking at the outer rubber flange(s) of the bushing. If the visual inspection warrants, a physical inspection can be conducted in which disassembly is required.

PIVOT BUSHING VISUAL INSPECTION

To perform pivot bushing visual inspection, it is not necessary to disassemble the pivot bushing connection. If the pivot bushing rubber flange(s) are intact and there are no signs of metal to metal contact the bushing does not require replacement.

- The support beam is designed with the pivot bushing centered in the support beam end hub. If the pivot bushing is not centered in the end hub, it is an indication that the pivot bushing could be worn and a pivot bushing physical inspection is required.
- If the pivot bushing shows signs of torn, separated or disconnected rubber, see Figures 6-6 and 6-7, this could be a result of axle misalignment. If this condition is evident, a pivot bushing physical inspection is required.
- If the outer rubber flange(s) is missing, or there are shards of rubber visible, see Figure 6-8, this could be a result of axle misalignment. If this condition is evident, pivot bushing replacement is required.

FIGURE 6-6 FIGURE 6-7 FIGURE 6-8

INSPECT FOR TORN, DISCONNECTED OR MISSING RUBBER FLANGE

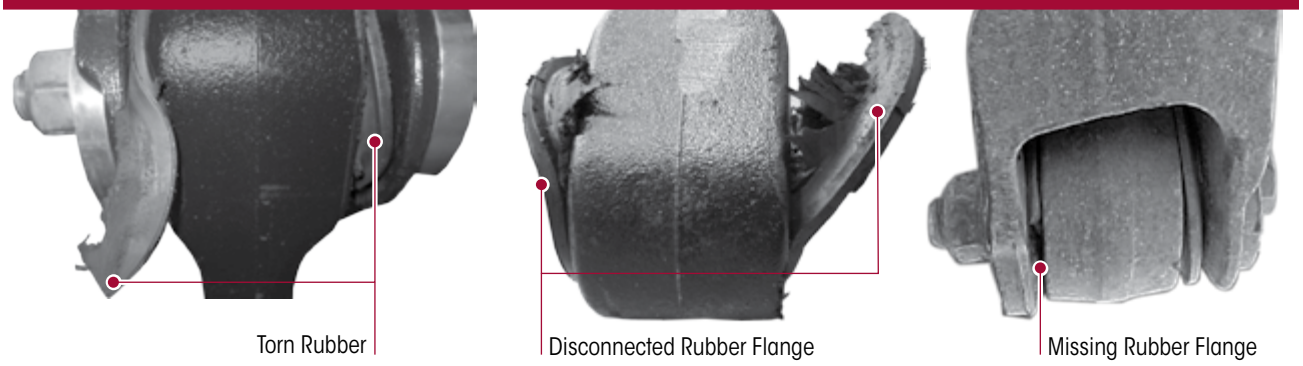

PIVOT BUSHING PHYSICAL INSPECTION

1. Remove the U-beam assembly, refer to U-beam Assembly in the Component Replacement of this publication.
2. After removal, inspect the pivot bushing connection, examine the pivot bushing inner metal area.
3. No replacement is needed if the bushing exhibits a tight joint, see Figure 6-9. An imprinted two-line wear pattern on the bushing inner metal indicates the pivot bushing is securely clamped in the frame hanger.

FIGURE 6-9

GOOD JOINT - NO REPLACEMENT NEEDED

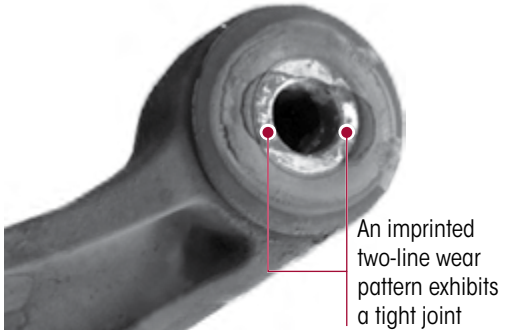

4. Inspect pivot bushing, replacement is necessary if any indications of the following are apparent, see Figure 6-10:
   - Signs of rust, distorted, separated or torn rubber, elongated or damaged bore. This could be a result of axle misalignment or loose fasteners.

FIGURE 6-10

INSPECT FOR INDICATIONS OF A LOOSE JOINT

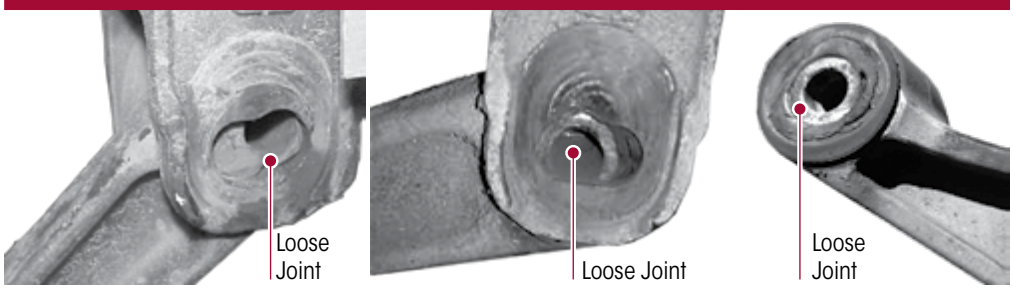

5. Inspect the inside of the frame hanger legs and the QUIK-ALIGN collars. If any of the following are present, the pivot bushing and one (1) or more of the mating components may require replacement:
   - Evidence of wear marks on the inside of the frame hanger legs indicating metal to metal contact or movement
   - The snout of the QUIK-ALIGN concentric or eccentric collar is elongated or damaged
6. Check the suspension alignment and adjust if necessary. Refer to Alignment & Adjustments Section of this publication.

D-PIN BUSHING VISUAL INSPECTION

It is not necessary to disassemble the D-pin connection to perform a D-pin visual inspection. The D-pin bushing is designed with a layer of rubber in the bushing, it is acceptable to see a bead of rubber protruding from the bushing, see Figure 6-11.

D-pin bushing replacement **IS REQUIRED** only when:

- Metal to metal contact wear marks on the D-pin outer metal are evident, see Figure 6-12
- D-pin outer metal is distorted, see Figure 6-12

FIGURE 6-11

ACCEPTABLE D-PIN

FIGURE 6-12

UNACCEPTABLE D-PIN

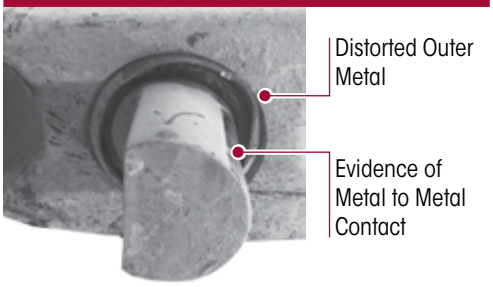

LONGITUDINAL AND TRANSVERSE TORQUE RODS

WARNING

PRIMAAX EX • PRIMAAX SUSPENSIONS INCORPORATE TRANSVERSE RODS FOR VEHICLE STABILITY. IF THESE COMPONENTS ARE DISCONNECTED OR ARE NON-FUNCTIONAL, THE VEHICLE SHOULD NOT BE OPERATED. FAILURE TO DO SO CAN RESULT IN ADVERSE VEHICLE HANDLING, POSSIBLE TIRE CONTACT WITH THE FRAME OR THE SUSPENSION, PREMATURE COMPONENT DAMAGE, OR SEVERE PERSONAL INJURY.

NOTE

Hendrickson recommends the use of Grade 8 bolts and Grade C locknuts for all straddle mount torque rod attachments.

Transverse torque rod attaching fasteners are furnished by the vehicle manufacturer. During preventive maintenance and service intervals it is important to inspect attaching fasteners for proper torque values per the vehicle manufacturer's specifications

Visually inspect torque rod bushings for torn or shredded rubber, inspect for bent, cracked, or broken torque rods, and for end hubs with an elongated oval shape. Any of these conditions will require component replacement.

Torque rod looseness inspection is necessary per one of the following methods below.

- **Method 1** — for tractor applications only with brakes applied, slowly rock the empty vehicle with power while a mechanic visually checks the action at both ends.
- **Method 2** — with the vehicle shut down, a lever check can be made with a long pry bar placed under each rod end and pressure applied.

TORQUE ROD LENGTH

Longitudinal torque rod length is determined by the truck manufacturer for optimum driveline angles. The longitudinal torque rods along with the bottom caps maintain these angles and control acceleration and brake forces, refer to the Pinion Angle Chart in the Parts Lists Section of this publication.

Transverse rod length is also determined by the vehicle manufacturer to center the axles under the frame.

- If the lateral alignment of the axles is incorrect, it may be necessary to shim the transverse torque rod at the straddle mount end. Shims can be installed between the transverse torque rod and the transverse torque rod frame bracket or between the transverse torque rod and axle tower bracket. Refer to vehicle manufacturer for proper shim location; also see Lateral Alignment in the Alignment & Adjustments Section of this publication.
- The transverse torque rods also control axle walk-out during cornering. The mounting brackets at the axle housing end of the torque rods are furnished and welded into position on the axle housings by the axle or vehicle manufacturer.

Transverse and longitudinal torque rods have attaching ends designated as straddle mount or through bolt as shown in Figures 6-13 and 6-14. Most can be replaced by pressing out the worn torque rod bushing and installing a replacement bushing, others require complete torque rod assembly replacement.

FIGURE 6-13

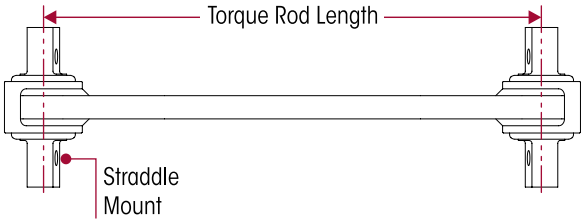

FIGURE 6-14

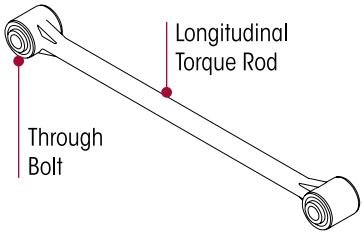

NOTE

TRAAX ROD and some ULTRA ROD torque rod assemblies (with the suffix **N** after the part number, i.e. 62000-565N) equipped on the PRIMAAX EX • PRIMAAX suspension are not re-bushable. The entire torque rod assembly must be replaced. This feature provides superior bushing retention in the torque rod end hub.

A two-piece **transverse torque rod** is available to cut and weld to the desired length, see Hendrickson Literature No. 45745-148.

SHOCK ABSORBERS

NOTE It is not necessary to replace shock absorbers in pairs if only one (1) shock absorber requires replacement.

Hendrickson uses a long service life, premium shock absorber on all PRIMAAX EX • PRIMAAX suspensions. When the shock absorber replacement is necessary, Hendrickson recommends that the shock absorbers be replaced with identical Hendrickson Genuine parts for servicing. Failure to do so will affect the suspension performance, durability, and will void any applicable warranty. See vehicle manufacturer's applicable publications for other shock absorber inspection requirements.

Inspection of the shock absorber can be performed by doing a heat test, and a visual inspection. For instructions on shock absorber replacement see the Component Replacement Section of this publication.

FIGURE 6-15

HEAT TEST INSPECTION

1. Drive the vehicle at moderate speeds on rough road for minimum of fifteen minutes.

WARNING DO NOT GRAB THE SHOCK ABSORBER AS IT COULD POSSIBLY BE HOT AND CAUSE PERSONAL INJURY.

2. Use an infrared thermometer to check the temperature of the shock absorber. This can also be performed by carefully touching the shock absorber body below the dust cover. Touch the frame to get an ambient reference, see Figure 6-15. A warm shock absorber is acceptable, a cold shock absorber should be replaced.
3. To inspect for an internal failure, remove and shake the suspected shock absorber. Listen for the sound of metal parts rattling inside. Rattling of metal parts can indicate that the shock absorber has an internal failure and the shock absorber should be replaced.

VISUAL INSPECTION

Look for these potential problems, see Figure 6-16, when doing a visual inspection. Inspect the shock absorbers fully extended. Replace as necessary.

FIGURE 6-16

SHOCK ABSORBER VISUAL INSPECTION - UNACCEPTABLE CONDITIONS

Damaged upper or lower mount | Damaged upper or lower bushing | Damaged dust cover and / or shock body | Bent or dented shock absorber | Improper intallation Example: washer (if equipped installed backwards

LEAKING VS. MISTING SHOCK VISUAL INSPECTION

FIGURE 6-17

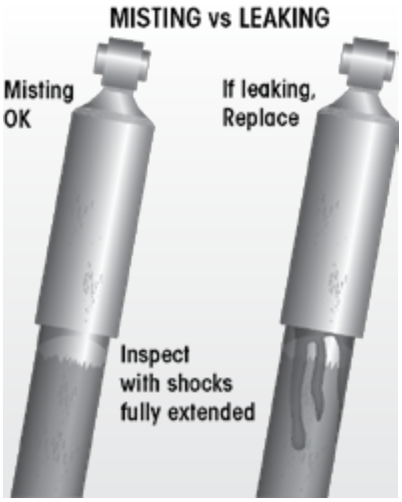

The inspection **must not** be conducted after driving in wet weather or a vehicle wash. The shock absorber needs to be free from water. Many shock absorbers are often misdiagnosed as failures. Misting is the process whereby very small amounts of shock absorber fluid evaporate at a high operating temperature through the upper seal of the shock absorber. When the "mist" reaches the cooler outside air, it condenses and forms a film on the outside of the shock absorber body. Misting is perfectly normal and necessary function of the shock absorber. The fluid which evaporates through the seal area helps to lubricate and prolong the life of the seal.

NOTE

PRIMAAX EX • PRIMAAX is equipped with a premium seal on the shock absorber, however this seal will allow for misting to appear on the shock absorber body (misting is not a leak and is considered acceptable).

Inspect the shock absorber fully extended. **A shock absorber that is truly leaking** will show signs of fluid **leaking in streams from the upper seal**. These streams can easily be seen, underneath the main body (dust cover) of the shock absorber. Replace as necessary.

AIR FITTINGS

1. If an air leak is suspected, begin by building up the air system to normal operating pressure.
2. Spray all nylon tube air fittings with a soapy water solution to detect the leak location.

NOTE

Air lines and fittings may be inspected for leaks using a soapy water solution. The height control valve, however, cannot be inspected using this method. All height control valves have an allowable leakage rate. The height control valve is not supplied by Hendrickson, although it is a required component. Hendrickson is not responsible for components supplied by the vehicle manufacturer. For assistance with inspection, maintenance and rebuild instructions on these components see vehicle manufacturer.

3. If an air leak is located, ensure the tubing end is clean and in good condition and the end is cut square. Check to see if the tubing is binding, bent or being pulled upon.
4. Visually inspect the air fitting's O-ring seal for signs of damage or contamination.

SECTION 7
Alignment & Adjustments

RIDE HEIGHT

NOTE The height control valve is not supplied by Hendrickson, although it is a required component. Hendrickson is not responsible for components supplied by the vehicle manufacturer. For assistance with inspection, maintenance and rebuild instructions on these components see vehicle manufacturer.

DRIVE AXLE ALIGNMENT

Proper alignment is essential for maximum ride quality, performance, and tire service life, the recommended alignment procedure is described below. This procedure should be performed if excessive or irregular tire wear is observed, or any time the QUIK-ALIGN connection is loosened or removed.

1. Use a work bay with a level surface.
2. Relax the suspension by slowly moving the vehicle back and forth several times in a straight line without using the brakes. This will slacken or loosen the suspension as the vehicle is positioned. End with all wheels positioned straight ahead.
3. **DO NOT** set the parking brake. Chock the front wheels of the vehicle.
4. Verify and maintain the air system at full operating pressure.
5. Verify the vehicle is at the proper ride height. Correct as necessary. See vehicle manufacturer for ride height inspection and adjustment.
6. Verify all suspension components are in good condition. Repair or replace any worn or damaged suspension components before proceeding with the alignment process.
7. Ensure all drive axle tires are the same size.

FIGURE 7-1

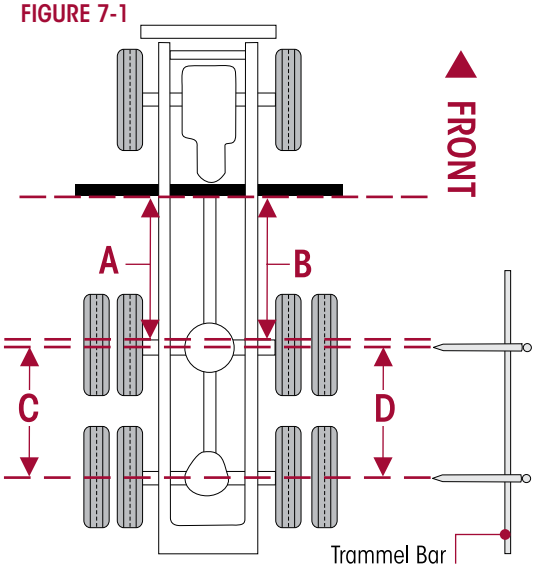

8. If axle alignment equipment is not available, use "C" clamps to securely clamp a six-foot piece of STRAIGHT bar stock or angle iron across the lower frame flange as shown in Figure 7-1. Select a location for the angle iron as far forward of the drive axle as possible where components will not interfere.
9. Accurately square the straight edge to the frame using a carpenter's square.
10. Using a measuring tape, measure from the straight edge to the forward face of the front drive axle arms at the centerline on both sides of the vehicle as shown in Figure 7-1, **A** and **B**.
11. Calculate the difference between measurements **A** and **B**.
    a. If the front drive axle is within vehicle manufacturer's specifications, proceed to check the rear drive axle (Step 12).

b. If alignment of the front drive axle **IS NOT** within the vehicle manufacturer's specifications, then the alignment of this axle **MUST** be corrected **BEFORE** measuring the rear drive axle alignment (Step 12). Correct the alignment of this axle by following the proper alignment instructions for the PRIMAAX EX • PRIMAAX suspension model as determined by the ride height of the suspension.

NOTE Since the remaining drive axle(s) will be aligned relative to the front drive axle, it is essential that the front drive axle is aligned within the vehicle manufacturer's specifications prior to the alignment of the remaining drive axle(s).

12. Using a trammel bar, measure the distance from the spindle center of the front drive axle to the spindle center of the rear drive axle on both sides of the vehicle, see Figure 7-1, **C** and **D**.
13. Calculate the difference between measurements **C** and **D**.
    a. If the measurements are within the vehicle manufacturer's specifications, then the rear drive axle alignment is acceptable. Proceed to check the pinion angles of the drive axles (Step 15).
    b. If alignment of the rear drive axle **IS NOT** within the vehicle manufacturer's specifications, then the alignment of this axle **MUST** be corrected **BEFORE** checking the drive axle pinion angles. Correct the alignment of this axle by following the proper alignment instructions for the PRIMAAX EX • PRIMAAX suspension model as determined by the ride height of the suspension.
14. Repeat Steps 12 and 13 for any remaining drive axle(s). Be sure all remaining drive axles are aligned relative to the front drive axle.
15. After all drive axles are aligned, check the pinion angle of each drive axle with a digital protractor. Refer to the vehicle manufacturer specifications for the required pinion angles, see Figure 7-2.
    a. If all pinion angles are within the vehicle manufacturer's specifications, then proceed to Step 16.
    b. If any pinion angle is out of the vehicle manufacturer's specifications it must be corrected. Follow the correct Pinion Angle Adjustment Suspension Procedure for the PRIMAAX EX • PRIMAAX suspension model and ride height.
16. Recheck measurements to confirm adjustments. Repeat Steps 10 through 15 until the correct alignment and pinion angles are achieved.
17. When all drive axle alignments and pinion angles are within the vehicle manufacturer's specifications then the alignment procedure is complete.

FIGURE 7-2

AXLE PINION ANGLE

Drive axle pinion angles are established by the vehicle manufacturer. The suspension bottom cap called out in the Pinion Angle Chart in the Parts Lists Section of this publication, are machined to specific angles to meet the vehicle manufacturer specified requirements. If it is necessary to fine tune the pinion angle see the Alignment & Adjustments Section of this publication.

To check the pinion angle, verify first that the suspension is at the proper ride height per the vehicle manufacturer, then install a digital protractor on the axle housing as shown in Figure 7-2. Verify the pinion angle is within the range specified by the vehicle manufacturer.

AXLE LATERAL ALIGNMENT – TANDEM

FIGURE 7-3

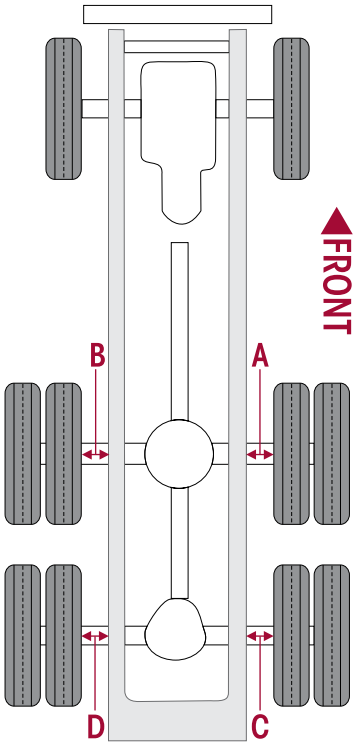

1. Use a work bay with a level floor. Drive the vehicle slowly, straight ahead. Try to slacken or loosen the suspension as the vehicle is positioned. End with all wheels positioned straight ahead. Try to roll to a stop without the brakes being used. **DO NOT** set the parking brake. Chock the front wheels of the vehicle.
2. Measure from the outside of the frame rail to the rim flange of the inner tire. Record the measurement **A** and **B**, see Figure 7-3.
3. Measure the same distance on the opposite side of the same axle. Record the measurement **C** and **D**, see Figure 7-3.
4. Verify the axle lateral alignment is within the vehicle manufacturer's specifications. Adding or removing shims that are located between the transverse torque rod and the frame rail will normally correct the axle lateral alignment.
   - A general rule of thumb is to use a torque rod shim with a thickness that is half of the difference between the two measurements.

EXAMPLE If the axle lateral alignment is out of specification by ¼" (6 mm), remove or install a ⅛" (3 mm) torque rod shim between the transverse torque rod and frame rail as needed. Refer to Longitudinal and Transverse Torque Rod Section in Preventive Maintenance Section of this publication.

NOTE Hendrickson recommends the use of Grade 8 bolts and Grade C locknuts. Washers are not necessary when flanged fasteners are used.

ALIGNMENT ADJUSTMENT INSTRUCTIONS

SERVICE HINT The eccentric collars (with the square drive feature) are located on the outboard side of the frame hangers with the concentric collars on the inboard side, see Figure 7-4. The total range of fore/aft axle adjustment is 1.0".

FIGURE 7-4

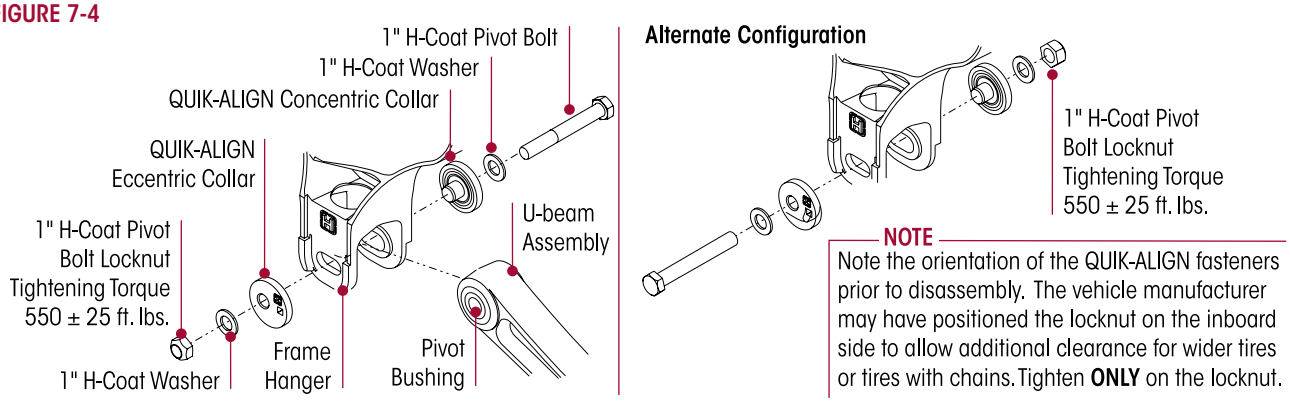

SERVICE HINT A suspension equipped with eccentric QUIK-ALIGN collars on both sides of an axle can be adjusted on both sides. A suspension equipped with an eccentric QUIK-ALIGN collar on only one side of the axle can be adjusted only on the side that has the eccentric QUIK-ALIGN collar. Contact the vehicle manufacturer for specifications.

WARNING

DISCARD USED QUIK-ALIGN FASTENERS. ALWAYS USE NEW QUIK-ALIGN FASTENERS TO COMPLETE A REPAIR. FAILURE TO DO SO COULD RESULT IN FAILURE OF THE PART, OR MATING COMPONENTS, ADVERSE VEHICLE HANDLING, PERSONAL INJURY, OR PROPERTY DAMAGE.

DO NOT ASSEMBLE QUIK-ALIGN JOINT WITHOUT THE PROPER FASTENERS. USE ONLY H-COATED FASTENERS TO SUSTAIN PROPER CLAMP FORCE. FAILURE TO DO SO CAN CAUSE ADVERSE VEHICLE HANDLING, PROPERTY DAMAGE OR PERSONAL INJURY AND VOID WARRANTY. ENSURE THAT THE QUIK-ALIGN FASTENER'S TORQUE VALUES ARE SUSTAINED AS RECOMMENDED IN THE TORQUE SPECIFICATIONS SECTION OF THIS PUBLICATION. FAILURE TO DO SO CAN CAUSE ADVERSE VEHICLE HANDLING RESULTING IN PERSONAL INJURY OR PROPERTY DAMAGE. FOLLOW VEHICLE MANUFACTURER'S FASTENER ORIENTATION WHEN PERFORMING ANY MAINTENANCE, SERVICE OR REPAIR.

1. Support the frame at ride height.

WARNING

PRIOR TO AND DURING DEFLATION AND INFLATION OF THE AIR SUSPENSION SYSTEM, ENSURE THAT ALL PERSONNEL AND EQUIPMENT ARE CLEAR FROM UNDER THE VEHICLE AND AROUND THE SERVICE AREA, FAILURE TO DO SO CAN CAUSE SERIOUS PERSONAL INJURY, DEATH, OR PROPERTY DAMAGE.

2. See additional Air Spring Warnings and Instructions in the Important Safety Notice Section of this publication prior to deflating or inflating the suspension system.
3. Disconnect the height control linkage assembly from the height control valve arm. Lower the height control valve arm(s) to exhaust the air in the air springs and deflate the rear suspension as per the vehicle manufacturer's instructions.

WARNING

SOME VEHICLE APPLICATIONS, SUCH AS VEHICLES EQUIPPED WITH OUTRIGGERS, RETAIN SOME AIR PRESSURE IN THE AIR SPRINGS AT ALL TIMES. PRIOR TO PERFORMING ANY MAINTENANCE, SERVICE, OR REPAIR OF THE SUSPENSION, VERIFY EACH AIR SPRING IS COMPLETELY DEFLATED. FAILURE TO DO SO COULD RESULT SERIOUS PROPERTY DAMAGE AND/OR SEVERE PERSONAL INJURY.

4. Using the measurements from the Drive Axle Alignment Inspection Procedure, Step 11, determine which QUIK-ALIGN collar will need adjusting to correct the axle alignment.

SERVICE HINT

If the axle can be adjusted on both sides, begin the adjustment on the side that is furthest out of specification.

NOTE

Use a new QUIK-ALIGN pivot bolt kit (see the Parts List Section of this publication) for any axle alignment or disassembly of the QUIK-ALIGN connection. This will help ensure that the proper clamp load is applied to the connection and help prevent the joint to slip in service.

5. On the side being adjusted, remove the old QUIK-ALIGN fastener and replace it with a new QUIK-ALIGN fastener. Snug the new QUIK-ALIGN fastener to 50-100 foot pounds. **DO NOT** tighten to the torque at this time. This will hold the eccentric flanged collar in place against the frame hanger face, and within the adjustment guide, but loose enough to permit the QUIK-ALIGN eccentric flanged collar to rotate freely.
6. See additional Air Spring Warnings and Instructions in the Important Safety Notice Section of this publication prior to deflating or inflating the suspension system.
7. Inflate the suspension by connecting the height control valve linkage to the height control valve arm. Verify the air springs inflate uniformly without binding.
8. Verify proper ride height adjustment per the vehicle manufacturer's instructions.

NOTE

When adjusting the alignment of an axle, the fasteners connecting the longitudinal torque rod to the frame hanger, above the QUIK-ALIGN collar being adjusted, must be loose at the frame hanger. This will allow the longitudinal torque rod to move freely with the axle while the alignment is adjusted. Failure to do so will result in bushing preload in all rubber connections on that side of the axle, shortening component life.

9. On the side of the axle being adjusted, loosen the fasteners connecting the longitudinal torque rod to the frame hanger. Remove any existing shims from this connection. Leave connection loose at this time.

FIGURE 7-5

FIGURE 7-6

10. Use a QUIK-ALIGN socket tool, see the Special Tools Section of this publication, and impact gun (Figures 7-5 and 7-6), or a ½" square drive breaker bar to rotate the QUIK-ALIGN eccentric collar to align the axle.
11. Once the correct axle alignment is achieved, use a calibrated torque wrench to tighten the 1" QUIK-ALIGN locknuts to 550 ± 25 foot pounds torque.
12. Fill any gap between the frame hanger and longitudinal torque rod with shims.
13. Tighten the longitudinal torque rod fasteners to the proper specification, see Torque Specifications Section of this publication per model designation.
14. Re-check the ride height (see vehicle manufacturer for ride height inspection and adjustment) to verify it is within the vehicle manufacturer's specifications.
15. Return to the Drive Axle Alignment Inspection Procedure, Step 13, for the remaining drive axles.

PINION ANGLE ADJUSTMENT

ADJUSTMENT OF 1.5 DEGREES OR LESS

NOTE When correcting the pinion angle of an axle the correction must be in equal amounts on both sides of the axle. However, the total number of shims per side may differ due to axle alignment.

1. Loosen the fasteners connecting the longitudinal torque rods to the frame hangers.
2. Install or remove shims as required in equal amounts, to both sides of the axle, to achieve the proper pinion angle, see Figure 7-7. To increase the pinion angle, install shims. To decrease the pinion angle, remove shims.

SERVICE HINT A general rule of thumb is, ⅛" change in the shim pack thickness will increase or decrease the pinion angle by ½ degree.

FIGURE 7-7

3. Tighten the longitudinal torque rod fasteners to the proper specification, see Torque Specifications Section of this publication per model designation.
4. Re-check the pinion angle and verify it is within the vehicle manufacturer's specifications.

ADJUSTMENT OF MORE THAN 1.5 DEGREES

If an adjustment of more than 1.5 degrees is required, it will be necessary to replace the bottom cap with a bottom cap that will achieve the desired pinion angle. After replacement of the bottom cap perform the drive axle alignment procedure. Refer to the Bottom Cap • Longitudinal Torque Rod Assembly • Top Pad • Torque Rod Spacer Selection Guide in the Parts List Section of this publication.

SECTION 8
Component Replacement

FASTENERS

When servicing a vehicle Hendrickson recommends replacing all removed fasteners with new equivalent fasteners. Maintain correct torque values at all times. Check torque values as specified. See Hendrickson's Torque Specifications Section of this publication. If non-Hendrickson fasteners are used follow torque specifications listed in the vehicle manufacturer's service manual.

HEIGHT CONTROL VALVE

NOTE

The height control valve is not supplied by Hendrickson, although it is a required component. Hendrickson is not responsible for components supplied by the vehicle manufacturer. For assistance with inspection, maintenance and rebuild instructions on these components see vehicle manufacturer.

AIR SPRING

DISASSEMBLY

1. Chock the wheels.
2. Support the frame.
3. Disconnect the height control valve arm(s) from the rubber grommet.

⚠ WARNING

PRIOR TO AND DURING DEFLATION AND INFLATION OF THE AIR SUSPENSION SYSTEM, ENSURE THAT ALL PERSONNEL AND EQUIPMENT ARE CLEAR FROM UNDER THE VEHICLE AND AROUND THE SERVICE AREA, FAILURE TO DO SO CAN CAUSE SERIOUS PERSONAL INJURY, DEATH, OR PROPERTY DAMAGE.

4. See additional Air Spring Cautions and Warnings in the Important Safety Notice Section of this publication prior to deflating or inflating the air system.
5. Lower the height control valve arm(s) to exhaust the air in the air springs and deflate the rear suspension as per the vehicle manufacturer's instructions.

⚠ WARNING

SOME VEHICLE APPLICATIONS, SUCH AS VEHICLES EQUIPPED WITH OUTRIGGERS, RETAIN SOME AIR PRESSURE IN THE AIR SPRINGS AT ALL TIMES. PRIOR TO PERFORMING ANY MAINTENANCE, SERVICE, OR REPAIR OF THE SUSPENSION, VERIFY EACH AIR SPRING IS COMPLETELY DEFLATED. FAILURE TO DO SO COULD RESULT SERIOUS PROPERTY DAMAGE AND/OR SEVERE PERSONAL INJURY.

6. Remove the air line from the air spring.

⚠ CAUTION

IF THE AIR SPRING IS BEING REMOVED FOR AN ALTERNATE REPAIR, IT IS MANDATORY TO LUBRICATE THE LOWER AIR SPRING FASTENERS WITH PENETRATING OIL AND REMOVE WITH HAND TOOLS TO PREVENT DAMAGE TO THE LOWER AIR SPRING MOUNTING STUD. FAILURE TO DO SO CAN CAUSE COMPONENT DAMAGE AND VOID WARRANTY.

7. If the air spring is being removed for an alternate repair, it will be necessary to clean and lubricate the lower mounting fasteners with penetrating oil. This will help prevent the air spring mounting studs from breaking during the removal process. Remove the lower mounting fasteners from the air springs using **HAND TOOLS** only.
8. Remove the lower air spring mounting bracket from the cross tube.
9. Remove and discard the upper air spring fasteners that attach:
   - **10" Ride Height** – to the upper air spring bracket to the frame
   - **15½" Ride Height** – to the upper air spring bracket assembly and the upper air spring bracket to the frame.
10. Remove the air spring.

ASSEMBLY

1. Inspect the lower and upper air spring bracket assemblies and mounting surfaces for any damage. Replace as necessary.
2. Loosely attach the upper air spring bracket assembly to the frame rail.

WARNING

FAILURE TO PRESS THE AIR SPRING AGAINST THE UNDERSIDE OF THE FRAME WHILE TIGHTENING THE UPPER AIR SPRING BRACKET CAN RESULT IN COMPONENT DAMAGE AND PERSONAL INJURY OR PROPERTY DAMAGE.

3. Press the upper air spring bracket assembly against the underside of the frame and tighten the frame fasteners to the proper torque per the vehicle manufacturer's specifications.
4. **15½" Ride Height** – attach the air spring to the upper air spring bracket assembly and tighten the locknuts to 35 ± 5 foot pounds torque, see Figure 8-2.
5. Install the air spring between the frame and the cross tube, see Figures 8-1 and 8-2.
   a. **PRIMAAX EX** — Ensure the **"air spring slot"** in the bottom of the air spring engages the "**beam notch**" on the top of the U-beam assembly.
   b. **PRIMAAX** — Ensure the **"V" notch** in the end cap engages the air spring **"locator tab"** on the air spring.

FIGURE 8-1

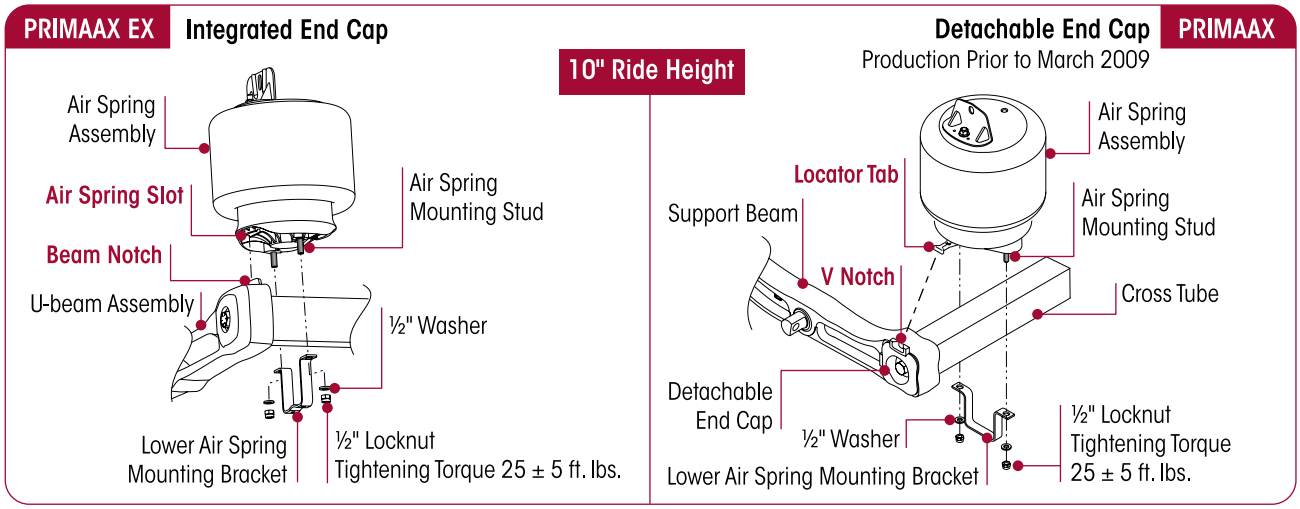

FIGURE 8-2

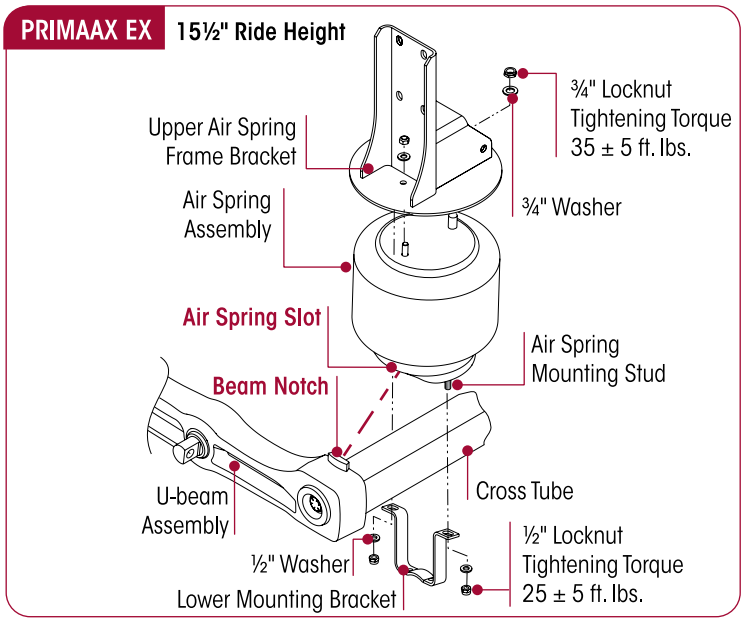

Pro Gear and Transmission • 906 W. Gore St. Orlando, FL 32805 • 1 (877) 776-4600 / (407) 872-1901 • parts@eprogear.com

6. Install the lower air spring mounting bracket around the cross tube, engaging the mounting air spring studs, see Figures 8-1 and 8-2.
7. Using **HAND TOOLS** only, install the lower mounting fasteners and tighten to 25 ± 5 foot pounds torque, see Figures 8-1 and 8-2.
8. Install the air line fitting to the air spring using Teflon (or equivalent) thread seal.
9. Connect the air line to the air spring.
10. See additional Air Spring Cautions and Warnings in the Important Safety Notice Section of this publication prior to deflating or inflating the air system.
11. Inflate the suspension slowly and verify that the air spring bladder inflates uniformly without binding.
12. Reconnect the height control linkage assembly to the height control valve arm.
13. Remove the frame supports.
14. Remove the wheel chocks.
15. Verify proper ride height adjustment as per the vehicle manufacturer's instructions.

SHOCK ABSORBER

DISASSEMBLY

1. Chock the wheels of the vehicle.
2. Remove and discard the **lower** shock absorber fasteners.
3. Remove the height control valve linkage bracket, note the orientation of the bracket for re-installation, see Figure 8-3.
4. Remove and discard the **upper** shock absorber fastener.
5. Slide the shock absorber out of the upper shock frame brackets.
6. Inspect the shock absorber frame brackets and mating components for damage or wear. Replace as necessary.

FIGURE 8-3

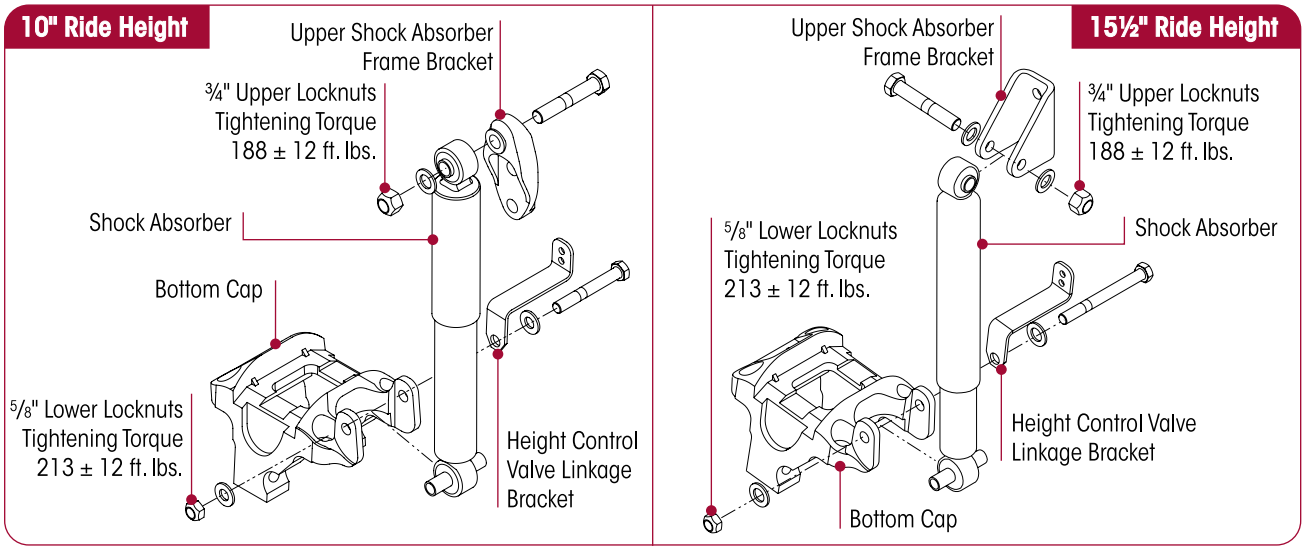

ASSEMBLY

1. Install the upper shock absorber frame bracket (if removed).
2. Install the shock absorber into the upper shock frame bracket.
3. Install the upper shock absorber fasteners.

WARNING

IF THE SUSPENSION MODELS IS EQUIPPED WITH THE CAST UPPER SHOCK BRACKET (PART NUMBER 67463-002), THE UPPER SHOCK BOLT MUST BE INDEXED INTO THE RECESSED HEX BORE OF THE UPPER SHOCK FRAME BRACKET FOR PROPER FASTENER INSTALLATION. FAILURE TO DO SO CAN CAUSE THE SHOCK FASTENERS TO BECOME LOOSE AND CAUSE PREMATURE COMPONENT DAMAGE.

4. Slide the lower shock absorber mount into the bottom cap.
5. Install the lower shock absorber fasteners and height control valve linkage bracket in the same orientation as prior to removal, see Figure 8-3.
6. Tighten the **upper** shock absorber locknut to 188 ± 12 foot pounds torque, see Figure 8-3.
7. Tighten the **lower** shock absorber locknut to 213 ± 12 foot pounds torque, see Figure 8-3.
8. Verify the vehicle ride height per the vehicle manufacturer's specifications.
9. Remove the wheel chocks.

TRANSVERSE TORQUE ROD

WARNING

PRIMAAX EX • PRIMAAX SUSPENSIONS INCORPORATE TRANSVERSE RODS FOR VEHICLE STABILITY. IF THESE COMPONENTS ARE DISCONNECTED OR ARE NON-FUNCTIONAL, THE VEHICLE SHOULD NOT BE OPERATED. FAILURE TO DO SO CAN RESULT IN ADVERSE VEHICLE HANDLING, POSSIBLE TIRE CONTACT WITH THE FRAME OR THE SUSPENSION, PREMATURE COMPONENT DAMAGE, OR SEVERE PERSONAL INJURY.

NOTE

TRAAX ROD and some ULTRA ROD torque rod assemblies (with the suffix **N** after the part number, i.e. 62000-565N) equipped on the PRIMAAX EX • PRIMAAX suspension are not re-bushable. The entire torque rod assembly must be replaced. This feature provides superior bushing retention in the torque rod end hub.

DISASSEMBLY

1. Chock the wheels of the vehicle.

SERVICE HINT

Note the quantity and location of shims, see Figure 8-4, removed to maintain the lateral alignment of the axle during assembly. See Alignment & Adjustments Section of this publication.

FIGURE 8-4

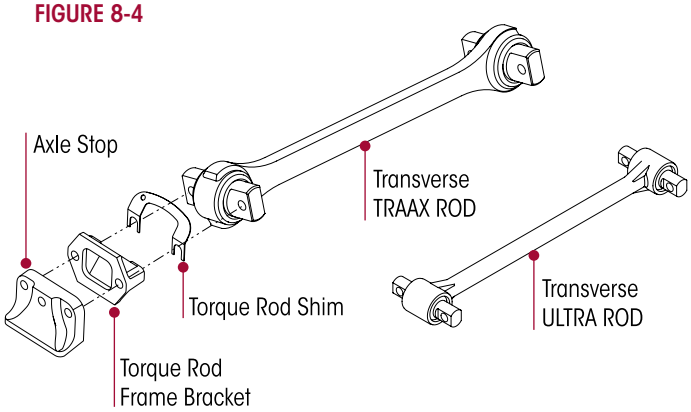

2. Remove the torque rod mounting fasteners and shims (if equipped).
3. Remove the torque rod.
4. Inspect the mounting surfaces for any wear or damage. Repair or replace as necessary.

ASSEMBLY

1. Install the torque rod.
2. Install the mounting fasteners and any shims that were removed.

NOTE

Hendrickson recommends the use of Grade 8 bolts and Grade C locknuts for all torque rod attachments.

3. Prior to tightening, ensure that the vehicle is at the proper ride height, see vehicle manufacturer for ride height inspection and adjustment.
4. Tighten all fasteners to the required torque specification. Refer to original equipment manufacturer for specifications.

5. Check the lateral alignment. If not within vehicle manufacturer's specified range, a lateral alignment is necessary. See Axle Lateral Alignment in the Alignment & Adjustments Section of this publication.
6. Remove the wheel chocks.

LONGITUDINAL TORQUE ROD

NOTE Some torque rod assemblies (with the suffix N after the part number, i.e. 62000-565N) equipped on the PRIMAAX EX • PRIMAAX suspension are not re-bushable. The entire torque rod assembly must be replaced. This feature provides superior bushing retention in the torque rod end hub.

DISASSEMBLY

1. Chock the wheels of the vehicle.

SERVICE HINT Note the quantity of shims removed to maintain the correct pinion angle of the axle at assembly. See Alignment & Adjustments Section of this publication.

2. Remove and discard the torque rod mounting fasteners and shims (if equipped) that connect the longitudinal torque rod to frame hanger, see Figure 8-5.

FIGURE 8-5

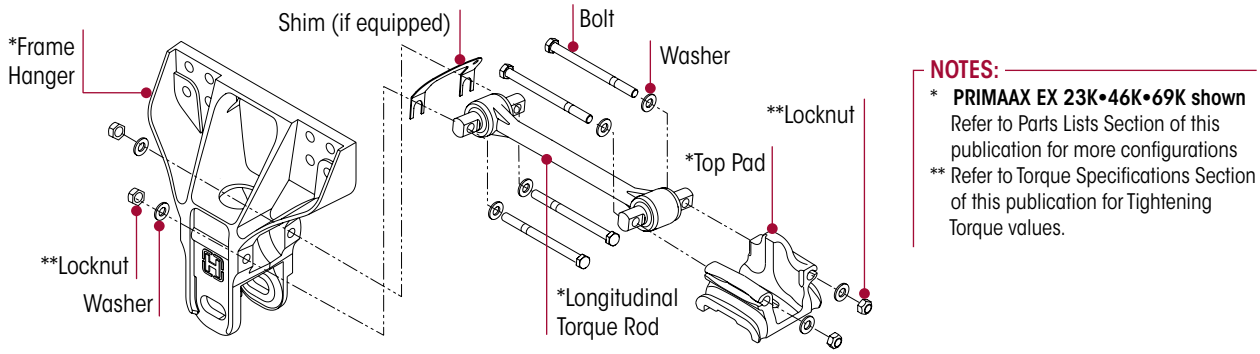

3. Remove and discard the torque rod mounting fasteners and shims (if equipped) that connect the longitudinal torque rod to top pad, see Figure 8-5.
4. Remove the longitudinal torque rod.
5. Inspect the mounting surfaces for any wear or damage, replace if necessary.

ASSEMBLY

1. Install the longitudinal torque rod.
2. Install the mounting fasteners and any shims that were removed, see Figure 8-5.

NOTE Hendrickson recommends the use of Grade 8 bolts and Grade C locknuts be used for all torque rod attachments.

NOTE It is mandatory to have the vehicle at the proper ride height prior to tightening the fasteners, see vehicle manufacturer for ride height inspection and adjustment.

3. Tighten all fasteners to the required torque specification. Refer to Torque Specifications Section of this publication, see Figure 8-6.

FIGURE 8-6

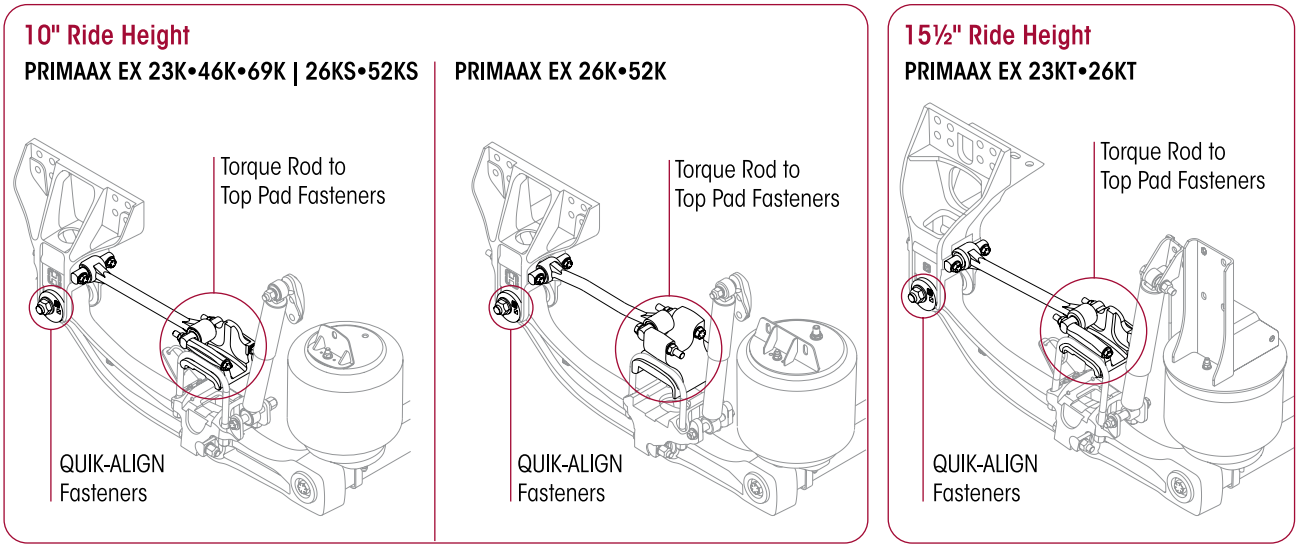

4. When assembly is complete check the drive axle pinion angles, see the Alignment & Adjustments Section of this publication.
5. Remove the wheel chocks.

TORQUE ROD BUSHING

NOTE

TRAAX RODS and some ULTRA ROD torque rod assemblies (with the suffix **N** after the part number, i.e. 62000-565N) equipped on the PRIMAAX EX • PRIMAAX suspension are not re-bushable. The entire torque rod assembly must be replaced. This feature provides superior bushing retention in the torque rod end hub.

You will need:

- A vertical press with a capacity of at least 10 tons
- A receiving, installation and funnel tool, see Special Tools Section of this publication for funnel tools and shop made tool specifications

DISASSEMBLY

⚠ CAUTION

DO NOT USE HEAT OR USE A CUTTING TORCH TO REMOVE THE BUSHINGS FROM THE TORQUE ROD. THE USE OF HEAT WILL ADVERSELY AFFECT THE STRENGTH OF THE TORQUE ROD; HEAT CAN CHANGE THE MATERIAL PROPERTIES. A COMPONENT DAMAGED IN THIS MANNER CAN RESULT IN THE ADVERSE VEHICLE HANDLING, POSSIBLE PERSONAL INJURY OR PROPERTY DAMAGE AND VOID WARRANTY.

SERVICE HINT

When servicing a straddle mount bar pin type bushing assembly, mark the clocking position of the straddle mount bar pin flats on the torque rod end hub before disassembly. This clocking mark will serve as a guide when installing the new bushing assembly so the original clocking position can be retained.

1. Remove the torque rod as detailed in this section.
2. When replacing a straddle mount bar pin type bushing assembly, mark the clocking position of the bushing assembly's bar pin flats with a paint stick on the torque rod end hub prior to disassembly. Clocking varies for different model configurations, see Figure 8-7.
3. Install the torque rod in the press. Support the torque rod end on the receiving tool with the end of the torque rod centered on the tool. Be sure the torque rod is squarely supported on the press bed.
4. Push directly on the inner metal of the bushing assembly until the bushing assembly clears the torque rod end tube.

5. Clean and inspect the inner diameter of the torque rod ends.

FIGURE 8-7

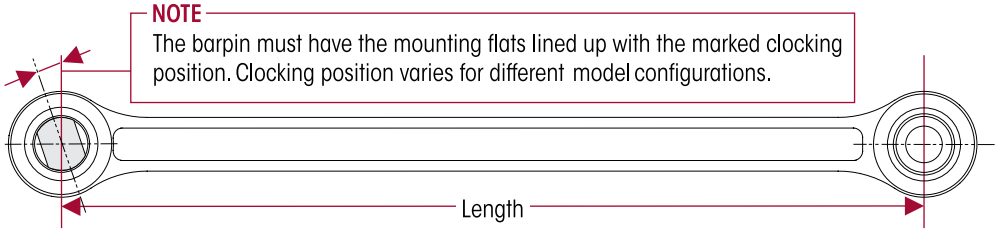

ASSEMBLY

NOTE **DO NOT** use a petroleum or soap base lubricant. Such lubricants can cause adverse reactions with the bushing, such as deterioration of the rubber, causing premature failure.

1. Lubricate the inner diameter of the torque rod end hub and the new rubber bushing with light Naphthenic Base Oil, such as 60 SUS at 100°F, see Figure 8-8.

FIGURE 8-8

FIGURE 8-9

FIGURE 8-10

2. Support the torque rod end hub on the receiving tool with the end hub of the torque rod centered on the receiving tool.

NOTE When replacing a straddle mount bar pin type bushing assembly, verify the correct clocking position of the straddle mount bar pin flats prior to installing the bushing assembly in the torque rod end hub.

3. Center the new bushing assembly on the torque rod end hub. When installing a straddle mount type bushing assembly, verify the bushing assembly's bar pin flats are clocked correctly.
4. Press directly on the inner metal of the bushing assembly. The rubber bushings of the bar pin must be centered within the torque rod end tubes.
5. When pressing in the new bushings overshoot the desired final position by approximately 3⁄16", see Figure 8-9.
6. Press the inner metal of the bushing assembly again from opposite side to center the bushing and inner metal within the torque rod end tube, see Figure 8-10.

CAUTION IF THE TORQUE ROD ASSEMBLY IS NOT ALLOWED THE ALLOTTED TIME FOR THE LUBRICANT TO DISSIPATE, THE BUSHING MAY SLIDE FROM THE TORQUE ROD END TUBE. THE BUSHING WILL THEN NEED TO BE REMOVED AND A NEW BUSHING RE-INSTALLED.

7. Wipe off excess lubricant. Allow the lubricant **four hours** to dissipate before operating vehicle.
8. Install torque rod assembly as detailed in this section.

SUPPORT BEAM ASSEMBLY AND CROSS TUBE

NOTE

Effective May 2010, the support beam assembly part numbers 66435-00X or 60831-00X (Forging Part Nos. 59363-001, 65082-000, 65284-000), cross tube, and previous U-beam assembly part numbers with the prefix 66659-XXX, for PRIMAAX suspension systems were discontinued, see Figure 8-11.

The U-beam assembly with integrated end caps, see Figure 8-12, is now a required replacement for any PRIMAAX support beam or cross tube component. Refer to the Support Beam and Cross Tube Replacement Guide table in the Parts List Section of this publication.

FIGURE 8-11

FORMER SUPPORT BEAM ASSEMBLY

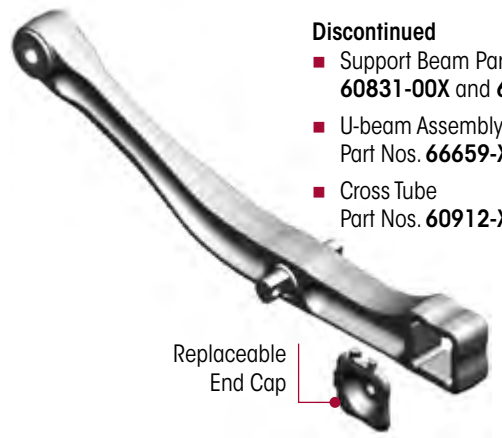

FIGURE 8-12

REPLACEMENT U-BEAM ASSEMBLY KIT

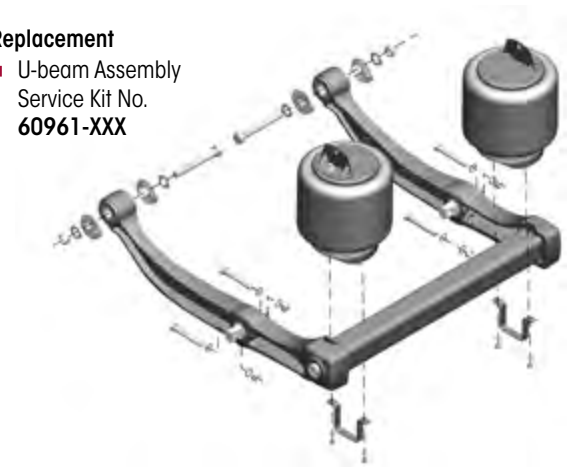

U-BEAM ASSEMBLY

IMPORTANT NOTICE

As of April 2010, Hendrickson introduced the new enhanced U-beam assembly design for PRIMAAX EX suspensions equipped on new production vehicles and for the aftermarket. The new U-beam assembly results in a maintenance-free integrated end cap connection. See Hendrickson publication SEU-0229 for PRIMAAX support beam/cross tube assembly conversion to the new U-beam assembly enhancement or refer to the Parts List Section of this publication.

DISASSEMBLY

1. Chock the front wheels.
2. Support the frame at ride height.
3. Raise and support the axle being serviced. Remove the wheels.
4. Disconnect the height control valve linkage assembly from the height control valve arm(s) as per vehicle manufacturer's instructions.

WARNING

PRIOR TO AND DURING DEFLATION AND INFLATION OF THE AIR SUSPENSION SYSTEM, ENSURE THAT ALL PERSONNEL AND EQUIPMENT ARE CLEAR FROM UNDER THE VEHICLE AND AROUND THE SERVICE AREA, FAILURE TO DO SO CAN CAUSE SERIOUS PERSONAL INJURY, DEATH, OR PROPERTY DAMAGE.

WARNING

SOME VEHICLE APPLICATIONS, SUCH AS VEHICLES EQUIPPED WITH OUTRIGGERS, RETAIN SOME PRESSURE IN THE AIR SPRINGS AT ALL TIMES. PRIOR TO PERFORMING ANY MAINTENANCE, SERVICE, OR REPAIR OF THE SUSPENSION, VERIFY EACH AIR SPRING IS COMPLETELY DEFLATED. FAILURE TO DO SO COULD RESULT IN SERIOUS PROPERTY DAMAGE AND/OR SEVERE PERSONAL INJURY.

5. See additional Air Spring Cautions and Warnings in the Important Safety Notice Section of this publication prior to deflating or inflating the air system.

6. Lower the height control valve arm(s) to exhaust the air in the air springs and deflate the rear suspension as per the vehicle manufacturer's instructions.

CAUTION

IF THE AIR SPRING IS BEING REMOVED FOR AN ALTERNATE REPAIR, IT IS MANDATORY TO LUBRICATE THE LOWER AIR SPRING FASTENERS WITH PENETRATING OIL AND REMOVE WITH HAND TOOLS TO PREVENT DAMAGE TO THE LOWER AIR SPRING MOUNTING STUD. FAILURE TO DO SO CAN CAUSE COMPONENT DAMAGE AND VOID WARRANTY.

7. Lubricate the lower mounting fasteners of the air springs with penetrating oil. This will help prevent the air spring mounting studs from breaking during the removal process.
8. Remove the lower mounting fasteners from the air springs using **HAND TOOLS** only.
9. Remove both lower air spring mounting brackets to disconnect air springs from the cross tube, refer to Air Spring in this section.

WARNING

IT IS MANDATORY TO USE A FLOOR JACK EQUIPPED WITH A FOUR INCH CONTACT PLATE TO SUPPORT THE U-BEAM ASSEMBLY AT THE CROSS TUBE TO FACILITATE SAFE LOWERING AND RAISING OF THE U-BEAM ASSEMBLY. DO NOT USE A BOTTLE JACK. A BOTTLE JACK DOES NOT HAVE ENOUGH CONTACT AREA AND CAN BE UNSTABLE. FAILURE TO DO SO CAN CAUSE COMPONENT DAMAGE OR RESULT IN PERSONAL INJURY.

10. Install a floor jack with a 4" contact plate to support the U-beam assembly at the cross tube.

SERVICE HINT

Each frame hanger will have a pair of QUIK-ALIGN collars. Note which type of QUIK-ALIGN collar is removed from each frame hanger location to facilitate the assembly process. Any eccentric (with the square drive feature) QUIK-ALIGN collar should be mounted on the outboard side of the frame hanger. Axle thrust angles can only be corrected on frame hangers equipped with eccentric QUIK-ALIGN collars. Also note the orientation of the fasteners per the vehicle manufacturer's specifications.

11. Mark the position of the QUIK-ALIGN **square drive** in relationship to the frame hanger and note the **orientation of the fasteners** prior to loosening the QUIK-ALIGN connection. This will facilitate the axle alignment process after the repair is complete.
12. Loosen both the QUIK-ALIGN fasteners, **DO NOT** remove at this time.
13. Remove D-pin fasteners on both sides of the suspension and discard.

SERVICE HINT

It may be necessary to rotate the QUIK-ALIGN eccentric collars to allow the full disengagement of the D-pins into the bottom caps.

SERVICE HINT

It may be necessary to raise the front of the differential to allow the D-pins to disengage the bottom caps.

WARNING

THE WEIGHT OF THE U-BEAM ASSEMBLY IS APPROXIMATELY 225 POUNDS. CARE SHOULD BE TAKEN AT REMOVAL AND INSTALLATION TO PREVENT PERSONAL INJURY OR DAMAGE TO COMPONENTS.

14. Lower the floor jack and pivot the U-beam assembly down.
15. Remove and discard the QUIK-ALIGN fasteners.
16. Remove QUIK-ALIGN eccentric and concentric collars.

NOTE

It may be necessary to use a pry bar to push the U-beam assembly out of the frame hangers.

17. Remove the U-beam assembly from the frame hangers.
18. Remove the U-beam assembly from the vehicle.
19. Inspect the U-beam assembly for any damage or wear and replace as necessary.

ASSEMBLY

1. Clean the QUIK-ALIGN slots in the hangers and collars of any dirt and debris and inspect for any wear or damage. Replace as necessary.
2. Prior to installing the U-beam assembly, verify the clamp group is tightened to the proper torque.

WARNING THE WEIGHT OF THE U-BEAM ASSEMBLY IS APPROXIMATELY 225 POUNDS. CARE SHOULD BE TAKEN AT REMOVAL AND INSTALLATION TO PREVENT PERSONAL INJURY OR DAMAGE TO COMPONENTS.

3. Install the U-beam assembly into the hangers.

WARNING DISCARD USED QUIK-ALIGN FASTENERS. ALWAYS USE NEW QUIK-ALIGN FASTENERS TO COMPLETE A REPAIR. FAILURE TO DO SO COULD RESULT IN FAILURE OF THE PART, OR MATING COMPONENTS, ADVERSE VEHICLE HANDLING, PERSONAL INJURY, OR PROPERTY DAMAGE.

WARNING DO NOT ASSEMBLE THE QUIK-ALIGN JOINT WITHOUT THE PROPER FASTENERS. USE ONLY H-COATED FASTENERS TO SUSTAIN PROPER CLAMP FORCE. FAILURE TO DO SO CAN CAUSE ADVERSE VEHICLE HANDLING, PROPERTY DAMAGE OR PERSONAL INJURY AND VOID WARRANTY. ENSURE THAT THE QUIK-ALIGN FASTENER'S TORQUE VALUES ARE SUSTAINED AS RECOMMENDED IN THE TORQUE SPECIFICATIONS SECTION OF THIS PUBLICATION. FAILURE TO DO SO CAN CAUSE ADVERSE VEHICLE HANDLING RESULTING IN PERSONAL INJURY OR PROPERTY DAMAGE. FOLLOW VEHICLE MANUFACTURER'S FASTENER ORIENTATION WHEN PERFORMING ANY MAINTENANCE, SERVICE OR REPAIR.

NOTE Use a new QUIK-ALIGN pivot bolt kit (see the Parts List Section of this publication) for any axle alignment or disassembly of the QUIK-ALIGN connection. This will help ensure that the proper clamp load is applied to the connection and help prevent the joint to slip in service.

4. Verify the correct QUIK-ALIGN collar (eccentric/concentric) is in the correct location as noted in the disassembly procedure.
5. Install QUIK-ALIGN connection with new Hendrickson fasteners and snug to about 50-100 foot pounds torque, **DO NOT** tighten at this time. The final torque must be done after the alignment is complete.
6. Position the U-beam assembly on a floor jack.
7. Raise the U-beam assembly until the D-pins engage in the bottom cap.

SERVICE HINT It may be necessary to rotate the QUIK-ALIGN eccentric collars to allow the full engagement of the D-pins into the bottom caps.

SERVICE HINT It may be necessary to raise or lower the front of the differential to allow the D-pins to engage in the bottom cap. Use a drift pin if necessary to align the D-pins with the bottom cap.

8. Install the D-pin fasteners from front to back, see Figure 8-13.

FIGURE 8-13

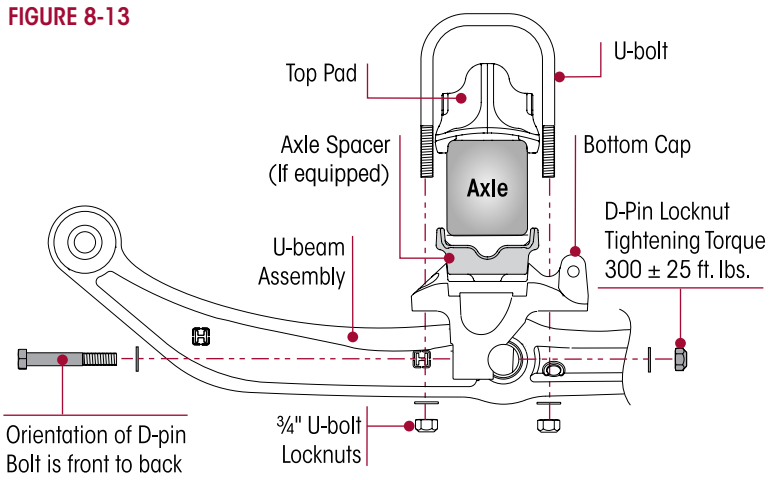

9. Remove floor jack supporting the U-beam assembly.
10. Tighten D-pin fasteners to 300 ± 25 foot pounds torque.
11. Install the air spring between the frame and cross tube, refer to Air Spring in this section.
12. Install the wheels and remove axle support.

13. See additional Air Spring Cautions and Warnings in the Important Safety Notice Section of this publication prior to deflating or inflating the air system.
14. Connect the linkage rod to the height control valve arm(s) to inflate the suspension as per vehicle manufacturer's instructions.
15. Remove frame support(s).
16. Remove the wheel chocks.

NOTE Alignment and QUIK-ALIGN final torque is necessary anytime the U-beam assembly is removed.

17. Check the alignment and adjust if necessary. See Alignment & Adjustments Section of this publication.
18. Once the correct axle alignment is achieved, use a calibrated torque wrench to tighten the 1" QUIK-ALIGN locknuts to 550 ± 25 foot pounds torque.

D-PIN BUSHING

You will need:

- Hendrickson Tool Part Nos. 66086-202 • 66086-204 (OTC Nos. 4246 • 4247), refer to the Special Tools Section of this publication

Removal		✔	✔	✔
Installation	✔		✔	✔
D-pin Bushing 23K • 26K				
	575164 Saddle	**575163** Adapter Pin	**576421** D-pin Adapter	**575167** Alignment Tool

DISASSEMBLY

1. Mark the spring to show the alignment of the existing D-pin. Install the alignment tool over the D-pin, and place the clamping plate over the alignment tool, see Figure 8-14.
2. Assemble the clamping nuts to the threaded rods.
3. Insert a threaded rod through the **upper** holes in the clamping plate and the head plate. Install a hex nut on the threaded rod, but **DO NOT** tighten at this time.

FIGURE 8-14

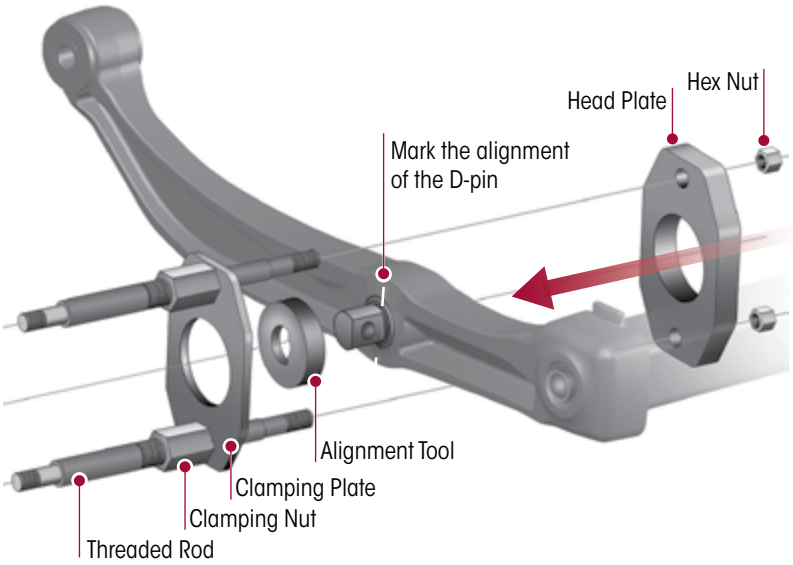

FIGURE 8-15

Tool assembly after Steps 1-5

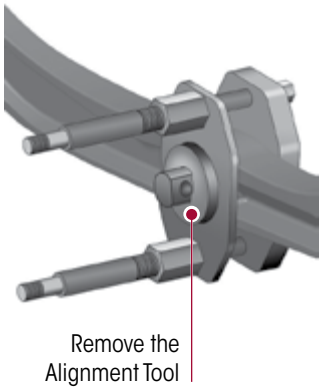

4. Insert a threaded rod through the **lower** holes in the clamping plate and the head plate. Install a hex nut on the threaded rod, but **DO NOT** tighten at this time.
5. Tighten the clamping nuts to the clamping plate, see Figure 8-15.
6. Remove the alignment tool.

WARNING

TO PREVENT PERSONAL INJURY, THE CYLINDER MUST BE FULLY THREADED INTO THE CYLINDER MOUNTING PLATE.

7. Thread the cylinder into the cylinder mounting plate, see Figure 8-16.

FIGURE 8-16

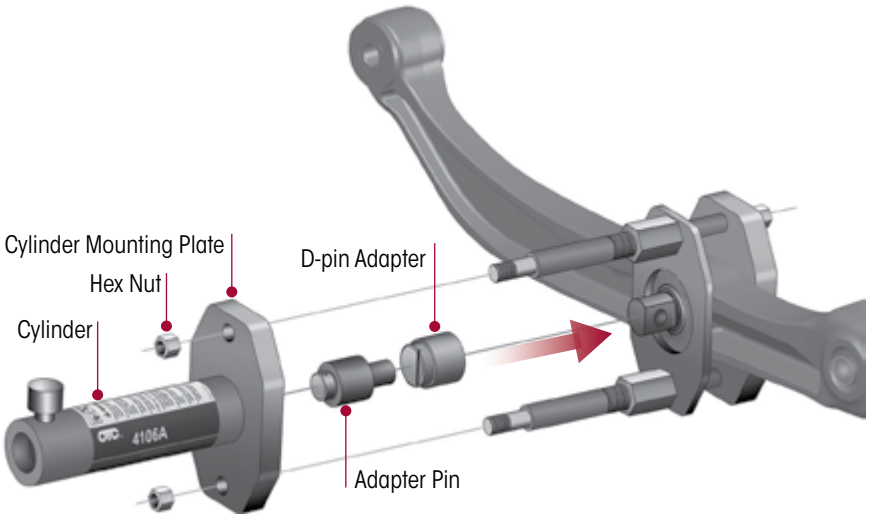

8. Install the cylinder mounting plate onto the end of the threaded rods. Adjust the clamping nuts as needed to fit the threaded rods through the holes in the cylinder mounting plate. Assemble the hex nuts on the threaded rods. Tighten the hex nuts on both ends of the threaded rods.
9. Place the D-pin adapter over the D-pin.
10. Insert the adapter pin into the head of the cylinder.
11. Prepare the hydraulic pump for use by following the instructions provided with the pump regarding hookup, venting, priming, and operation.

WARNING

TO PREVENT PERSONAL INJURY, PUMP CAPACITY MUST NOT EXCEED 10,000 PSI.

12. Connect the hydraulic hose from the hydraulic pump to the cylinder.
13. Operate the pump to extend the cylinder piston and apply pressure to push the D-pin out of the spring.

WARNING

TO PREVENT PERSONAL INJURY FROM POSSIBLE BREAKAGE UNDER PRESSURE, DO NOT STAND IN THE VICINITY OF THE TOOL WHILE THE D-PIN IS BEING EXTRACTED. IT IS ESPECIALLY IMPORTANT TO NOT STAND IN THE DIRECTION OF THE HYDRAULIC FORCE.

ASSEMBLY

1. Clean and thoroughly lubricate the entire surface of the inside diameter of the spring, see Figure 8-17.
2. Insert the saddle into the head of the cylinder.
3. Assemble the new D-pin and the D-pin adapter as shown. Align the line in the D-pin adapter with the alignment marks made during the removal procedure.
4. Operate the pump to extend the cylinder piston and apply enough pressure to hold the tool and components. Check the alignment of the D-pin. The centerline of the D-pin must be aligned with the centerline of the inside diameter of the spring.

WARNING

TO PREVENT PERSONAL INJURY, PUMP CAPACITY MUST NOT EXCEED 10,000 PSI.

FIGURE 8-17

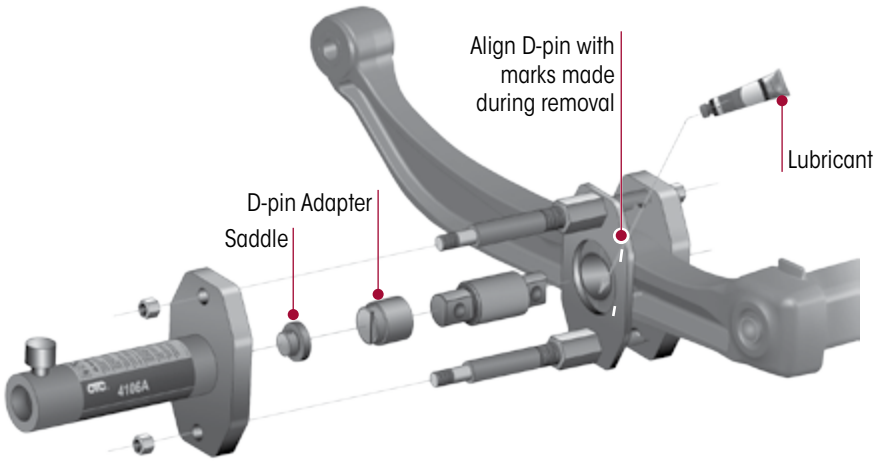

5. Operate the pump to apply pressure to install the D-pin completely into the spring.

WARNING

TO PREVENT PERSONAL INJURY FROM POSSIBLE BREAKAGE UNDER PRESSURE, DO NOT STAND IN THE VICINITY OF THE TOOL WHILE THE D-PIN IS BEING INSTALLED. IT IS ESPECIALLY IMPORTANT TO NOT STAND IN THE DIRECTION OF THE HYDRAULIC FORCE.

QUIK-ALIGN PIVOT BUSHING

- **METHOD A** – Hendrickson Tool Part Nos. 66086-202 • 66086-204 (OTC Nos. 4246 • 4247), refer to the Special Tools Section of this publication
- **METHOD B** – Hendrickson Tool No. 66086-203L, see the procedure in this section or refer to Hendrickson Literature No. 59310-061

METHOD A – Using Tool Nos. 66086-202 • 66086-204

You will need:

- Hendrickson Tool Part Nos. 66086-202 • 66086-204 (OTC Nos. 4246 • 4247), refer to the Special Tools Section of this publication

REMOVAL	✔	✔	✔	✔
INSTALLATION	✔		✔	✔
QUIK-ALIGN Bushing				
	575163 Adapter Pin	**576421** D-pin Adapter	**575165** Bushing Support	**575167** Alignment Tool

DISASSEMBLY

1. Insert the adapter pin through the alignment tool and into the pivot bushing hole as shown in Figure 8-18.
2. Insert the bushing support over the pivot bushing.
3. Assemble the clamping nuts to the threaded rods.
4. Insert a threaded rod through the upper holes in the clamping plate and the head plate while positioning the head plate over the bushing support. Install a hex nut on the threaded rod, but **DO NOT** tighten at this time.

FIGURE 8-18

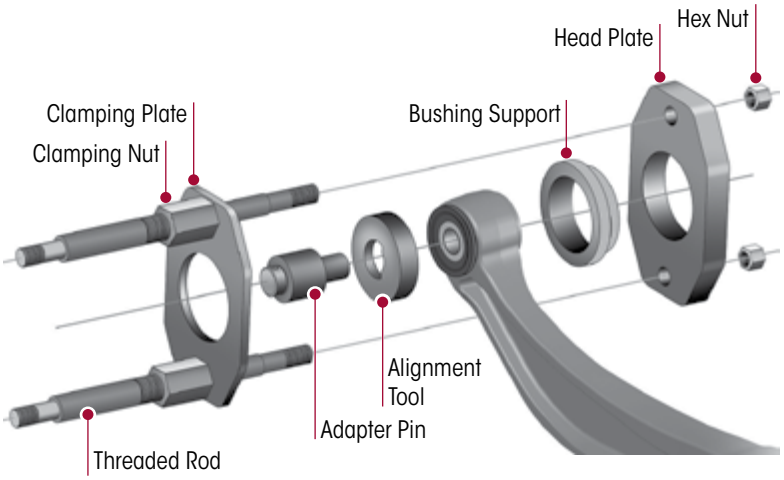

FIGURE 8-19

Tool assembly after Steps 1-6

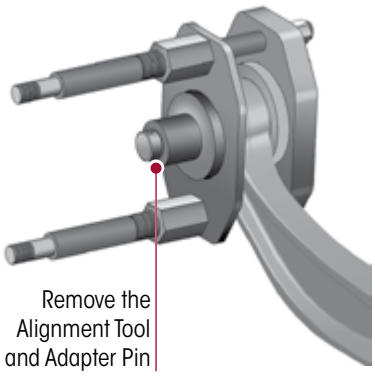

5. Insert a threaded rod through the lower holes in the clamping plate and the head plate. Install a hex nut on the threaded rod, but **DO NOT** tighten at this time.
6. Tighten the clamping nuts to the clamping plate, see Figure 8-19.
7. Remove the alignment tool and adapter pin.

WARNING

TO PREVENT PERSONAL INJURY, THE CYLINDER MUST BE FULLY THREADED INTO THE CYLINDER MOUNTING PLATE.

8. Thread the cylinder into the cylinder mounting plate, see Figure 8-20.

FIGURE 8-20

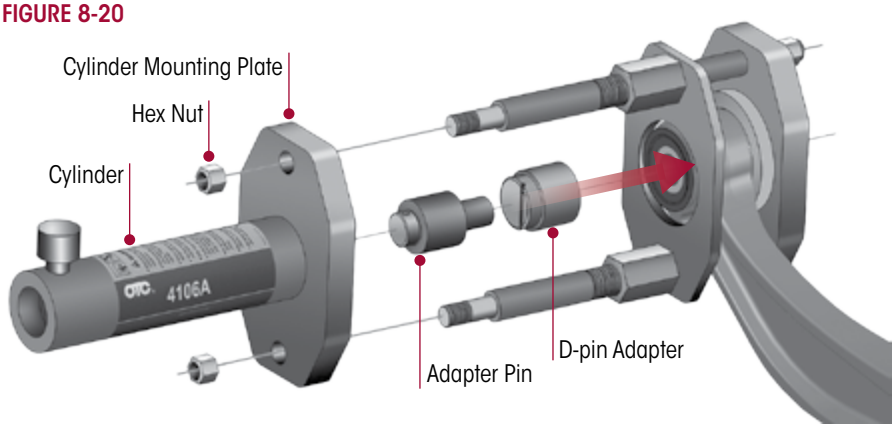

9. Install the cylinder mounting plate onto the end of the threaded rods. Adjust the clamping nuts as needed to fit the threaded rods through the holes in the cylinder mounting plate. Assemble the hex nuts on the threaded rods. Tighten the hex nuts on both ends of the threaded rods.
10. Hold the D-pin adapter over the pivot bushing until contact is made with the adapter pin.
11. Insert the adapter pin into the head of the cylinder.

WARNING

TO PREVENT PERSONAL INJURY, PUMP CAPACITY MUST NOT EXCEED 10,000 PSI.

12. Prepare the hydraulic pump for use by following the instructions provided with the pump regarding hookup, venting, priming, and operation.

WARNING

TO PREVENT PERSONAL INJURY FROM POSSIBLE BREAKAGE UNDER PRESSURE, DO NOT STAND IN THE VICINITY OF THE TOOL WHILE THE PIVOT BUSHING IS BEING EXTRACTED. IT IS ESPECIALLY IMPORTANT TO NOT STAND IN THE DIRECTION OF THE HYDRAULIC FORCE.

13. Connect the hydraulic hose from the hydraulic pump to the cylinder.
14. Operate the pump to extend the cylinder piston and apply pressure to push the pivot bushing out of the spring.

ASSEMBLY

1. Clean and thoroughly lubricate the entire surface of the inside diameter of the spring, see Figure 8-21.
2. Insert the adapter pin into the head of the cylinder.

FIGURE 8-21

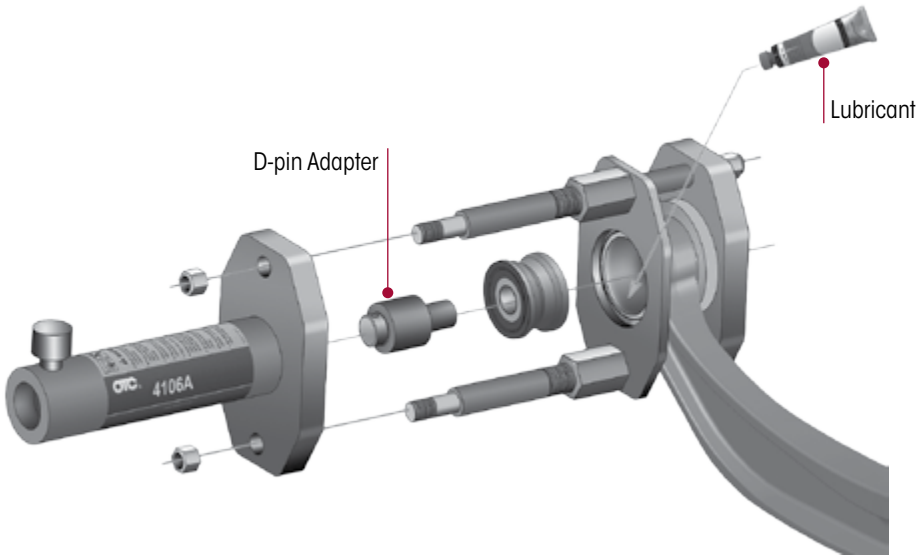

3. Place the pivot bushing on the end of the adapter pin as shown.
4. Operate the pump to extend the cylinder piston and apply enough pressure to hold the tool and components. Check the alignment of the pivot bushing.

WARNING TO PREVENT PERSONAL INJURY, PUMP CAPACITY MUST NOT EXCEED 10,000 PSI.

5. Operate the pump to apply pressure to install the pivot bushing completely into the spring.

WARNING TO PREVENT PERSONAL INJURY FROM POSSIBLE BREAKAGE UNDER PRESSURE, DO NOT STAND IN THE VICINITY OF THE TOOL WHILE THE PIVOT BUSHING IS BEING INSTALLED. IT IS ESPECIALLY IMPORTANT TO NOT STAND IN THE DIRECTION OF THE HYDRAULIC FORCE.

METHOD B – Using Tool No. 66086-203L

SERVICE HINT Use QUIK-ALIGN Pivot Bushing Tool No. 66086-203L to help with the installation / removal of the QUIK-ALIGN pivot bushing for PRIMAAX EX • PRIMAAX suspensions. The tool allows the old bushing to be pushed out from the U-beam assembly into the receiving cylinder at the same time as installing the new bushing into the U-beam assembly.

WARNING A TECHNICIAN USING A SERVICE PROCEDURE OR TOOL WHICH HAS NOT BEEN RECOMMENDED BY HENDRICKSON MUST FIRST SATISFY HIMSELF THAT NEITHER HIS SAFETY NOR THE VEHICLE'S SAFETY WILL BE JEOPARDIZED BY THE METHOD OR TOOL SELECTED. INDIVIDUALS DEVIATING IN ANY MANNER FROM THE INSTRUCTIONS PROVIDED WILL ASSUME ALL RISKS OF CONSEQUENTIAL PERSONAL INJURY OR DAMAGE TO EQUIPMENT INVOLVED.

NOTE When replacing a pivot bushing it is recommended to replace both pivot bushings on the U-beam assembly.

To replace the QUIK-ALIGN pivot bushing you will need:

- A QUIK-ALIGN pivot bushing service tool (Part No. 66086-203L), see Figure 8-22
- ¾" Impact wrench (impact gun), some ½" impact wrenches may work

FIGURE 8-22

NOTE

Apply NLGI #2–EP chassis lubricant to each face of the thrust washers and to the drive screw that will engage through the receiving cylinder.

Apply P80 lubricant to the face of the lead-in flange and the outer diameter of **NEW** pivot bushing

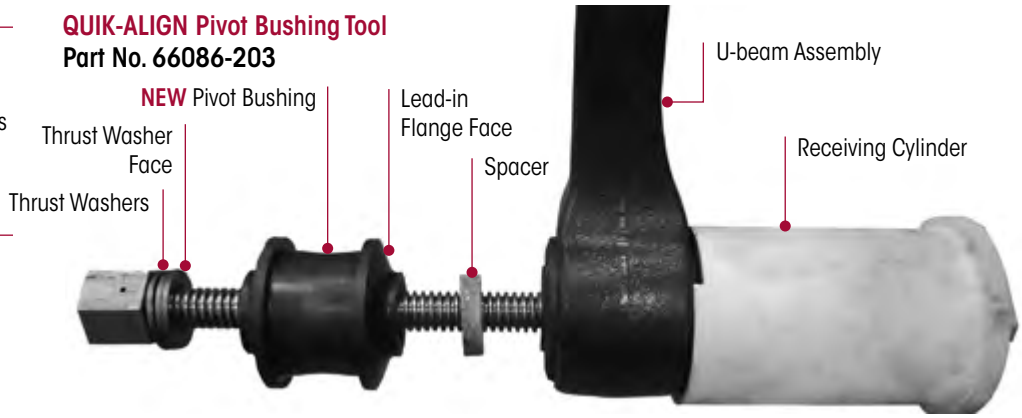

DISASSEMBLY

1. Remove the U-beam assembly from the vehicle per the U-beam Assembly removal procedure in this section.
2. After removal, place U-beam assembly on the floor or suitable work area.

ASSEMBLY

NOTE The 66086-203L tool can be used to remove the old bushing first then install the new bushing, if bore inspection is needed.

1. Install the pivot bushing tool and the new pivot bushing as shown in Figure 8-22.
2. Remove any loose rubber or debris from the old bushing.
3. Apply NLGI #2–EP (Extreme Pressure) chassis lubricant to each face of the thrust washers and to the drive screw that will engage through the receiving cylinder.
4. Snug the threaded drive screw to hold the thrust washers, NEW pivot bushing, spacer, U-beam assembly with the old pivot bushing and the receiving cylinder in place, see Figure 8-23.

FIGURE 8-23

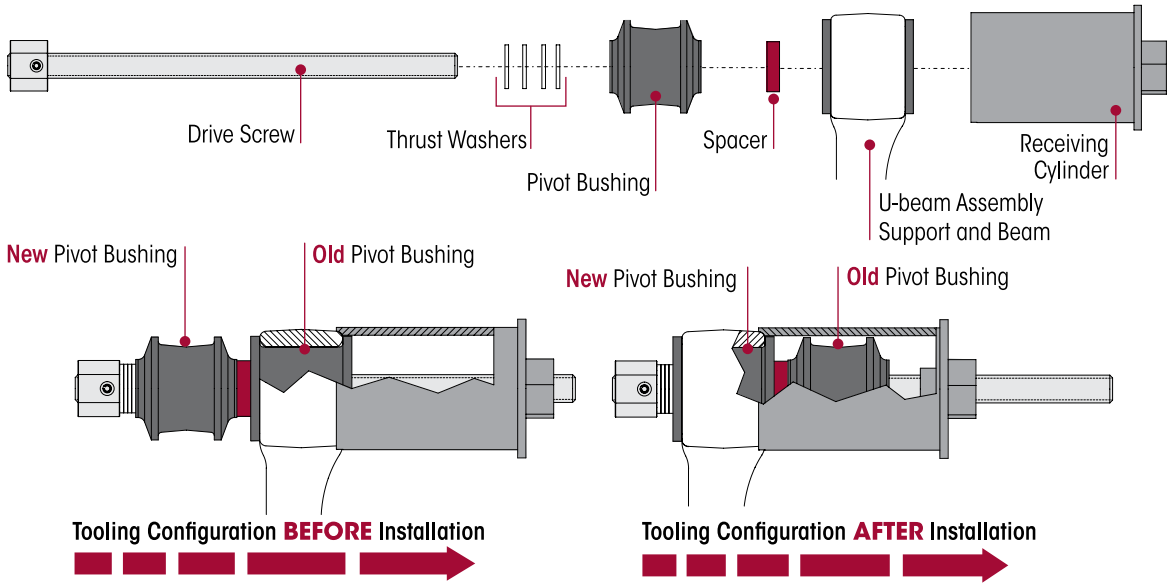

NOTE **DO NOT** use petroleum or soap base lubricant, it can cause an adverse reaction with the bushing material, such as deterioration.

5. Apply P-80 lubricant to the face of the lead-in flange and the outer diameter of NEW pivot bushing, see Figure 8-22. P-80 lubricant is supplied in the QUIK-ALIGN Pivot Bushing Kits (Wheel End Kit No. 60961-720 or Axle Set Kit No. 60632-020).

SERVICE HINT

To center the pivot bushing within the end hub, it may be necessary to overshoot the desired final position. Then from opposite side, reverse the installation tool and press the pivot bushing again to center the bushing within the beam end hub.

6. Using a ¾" impact wrench, rotate the drive screw in a continuous motion without stopping until the pivot bushing appears centered in the hub. The old bushing will fall into the receiving cylinder, see Figure 8-23.
7. Using the impact wrench rotate the drive screw in the opposite direction to remove tool.
8. Repeat Steps 1 through 6 for other side of the U-beam assembly.
9. Allow the lubricant four hours to dissipate before fully operating the vehicle.
10. Install the U-beam assembly per the U-beam Assembly installation procedure in this section.

TOP PAD

DISASSEMBLY

1. Chock the front wheels.
2. Support the frame at ride height.
3. Disconnect the height control valve linkage assembly from the height control valve arm(s) as per the vehicle manufacturer's instructions.

WARNING

PRIOR TO AND DURING DEFLATION AND INFLATION OF THE AIR SUSPENSION SYSTEM, ENSURE THAT ALL PERSONNEL AND EQUIPMENT ARE CLEAR FROM UNDER THE VEHICLE AND AROUND THE SERVICE AREA, FAILURE TO DO SO CAN CAUSE SERIOUS PERSONAL INJURY, DEATH, OR PROPERTY DAMAGE.

4. See additional Air Spring Cautions and Warnings in the Important Safety Notice Section of this publication prior to deflating or inflating the air system.

WARNING

SOME VEHICLE APPLICATIONS, SUCH AS VEHICLES EQUIPPED WITH OUTRIGGERS, RETAIN SOME AIR PRESSURE IN THE AIR SPRINGS AT ALL TIMES. PRIOR TO PERFORMING ANY MAINTENANCE, SERVICE, OR REPAIR OF THE SUSPENSION, VERIFY EACH AIR SPRING IS COMPLETELY DEFLATED. FAILURE TO DO SO COULD RESULT SERIOUS PROPERTY DAMAGE AND/OR SEVERE PERSONAL INJURY.

5. Lower the height control valve arm(s) to exhaust the air in the air springs and deflate the rear suspension as per the vehicle manufacturer's instructions.

SERVICE HINT

Note the quantity of shims removed to maintain the correct pinion angle of the axle at assembly. See Alignment & Adjustments Section of this publication.

6. Remove and discard the fasteners from the longitudinal torque rod to top pad joint and shims (if equipped), see Figure 8-24.

NOTE

Due to certain pinion angle configurations, the removal of the D-pin bolts may be necessary to access the U-bolt locknuts.

WARNING

THE USE OF A FLOOR JACK EQUIPPED WITH A FOUR INCH SUPPORT PLATE IS MANDATORY TO SUPPORT THE U-BEAM ASSEMBLY. DO NOT USE A BOTTLE JACK. THE USE OF A BOTTLE JACK WILL NOT ENGAGE THE CROSS TUBE TO FACILITATE SAFE LOWERING AND RAISING OF THE U-BEAM ASSEMBLY. FAILURE TO DO SO CAN CAUSE COMPONENT DAMAGE OR RESULT IN PERSONAL INJURY.

WARNING

THE WEIGHT OF THE U-BEAM ASSEMBLY IS APPROXIMATELY 225 POUNDS. CARE SHOULD BE TAKEN AT REMOVAL AND INSTALLATION TO PREVENT PERSONAL INJURY OR DAMAGE TO COMPONENTS.

7. Support the U-beam assembly with a floor jack or jack stand that is equipped with a 4" contact plate.

FIGURE 8-24

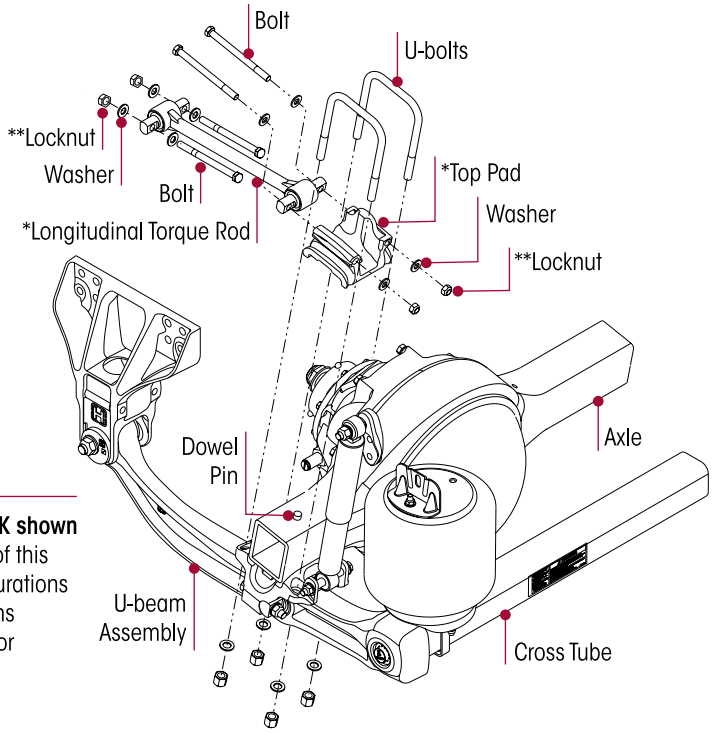

NOTES
* **PRIMAAX EX 23K•46K•69K shown** Refer to Parts Lists Section of this publication for more configurations
** Refer to Torque Specifications Section of this publication for Tightening Torque values.

8. Remove and discard the U-bolt fasteners from the clamp group.
9. Remove the top pad.
10. Inspect the top pad and the axle housing for any cracks or damage. Replace if necessary.

ASSEMBLY

NOTE The models PRIMAAX EX 26K•52K, PRIMAAX 260•520, may be equipped with top pads and bottom caps that are contoured to fit the axle housing on the axle's short arm side. Ensure the correct parts are installed at each location, refer to the Bottom Cap Selection Guides in Parts List Section of this publication.

1. Install the top pad on the top of the axle engaging the dowel pin. Care should be taken to ensure the taller ear of the top pad is mounted to the inboard side of the suspension. The top pad varies with different models and may appear different, see Figure 8-25.
2. Install the new U-bolts, washers, and locknuts.

FIGURE 8-25

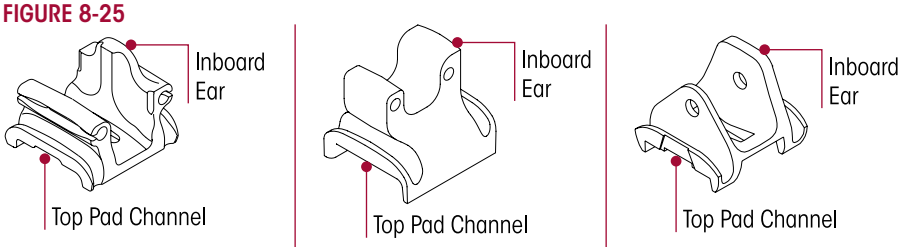

PRIMAAX EX 23K•46K•69K | 26KS•52KS

PRIMAAX EX 26K•52K
PRIMAAX 260•520

PRIMAAX 230•460•690

NOTE Current Hendrickson Truck Suspension Systems U-bolt locknuts for the PRIMAAX EX • PRIMAAX suspension are ¾"-16 Grade C and are phosphate and oil coated.

3. Verify that the U-bolts are seated properly in the top pad channels, see Figure 8-24.
4. Tighten the U-bolt locknuts evenly in 50 foot pounds increments in the proper pattern to achieve uniform bolt tension, see Figure 8-26.

FIGURE 8-26

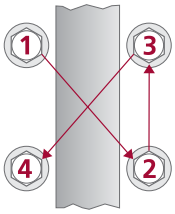

5. Rap the top of the U-bolts with a dead blow mallet and retighten to the proper torque. **DO NOT** exceed specified torque on U-bolt locknuts. Tighten the ¾" locknuts to 375 ± 25 foot pounds torque.
6. Tighten the D-pin fasteners to 300 ± 25 foot pounds torque if loosened or removed during disassembly, see Figure 8-27.

FIGURE 8-27

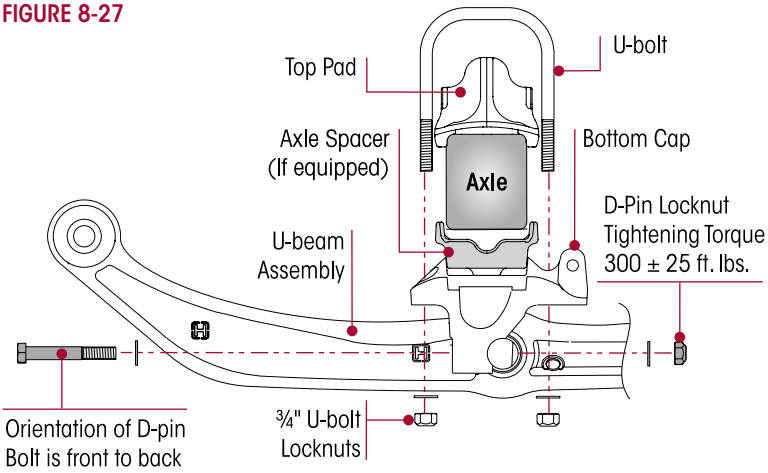

7. Remove the support from the U-beam assembly.
8. Install the fasteners on the longitudinal torque rod, **DO NOT** tighten at this time.
9. See additional Air Spring Cautions and Warnings in the Important Safety Notice Section of this publication prior to deflating or inflating the air system.
10. Connect the linkage rod(s) to the height control valve arm(s) to inflate the suspension as per the vehicle manufacturer's instructions.
11. Remove the frame stands.

NOTE It is mandatory to have the vehicle at proper ride height prior to tightening the ⅞" top pad through bolt locknut to torque specifications.

12. Tighten the longitudinal torque rod fasteners to the required specification, see Torque Specifications Section of this publication.
13. Remove the wheel chocks.

BOTTOM CAP AND AXLE SPACER (if equipped)

NOTE It is not necessary to loosen the QUIK-ALIGN connection to service the bottom cap, therefore alignment is preserved during service. If the QUIK-ALIGN connection is loosened during service, alignment is required after service is completed.

DISASSEMBLY

1. Chock the wheels of the axle.
2. Raise the frame of the vehicle to remove the load from the suspension. Support the frame.
3. Raise and support the axle being serviced. Remove the tires.
4. Disconnect the height control linkage assembly from the height control valve arm, see vehicle manufacturer's instructions.

WARNING PRIOR TO AND DURING DEFLATION AND INFLATION OF THE AIR SUSPENSION SYSTEM, ENSURE THAT ALL PERSONNEL AND EQUIPMENT ARE CLEAR FROM UNDER THE VEHICLE AND AROUND THE SERVICE AREA, FAILURE TO DO SO CAN CAUSE SERIOUS PERSONAL INJURY, DEATH, OR PROPERTY DAMAGE.

5. See additional Air Spring Cautions and Warnings in the Important Safety Notice Section of this publication prior to deflating or inflating the air system.

WARNING

SOME VEHICLE APPLICATIONS, SUCH AS VEHICLES EQUIPPED WITH OUTRIGGERS, RETAIN SOME AIR PRESSURE IN THE AIR SPRINGS AT ALL TIMES. PRIOR TO PERFORMING ANY MAINTENANCE, SERVICE, OR REPAIR OF THE SUSPENSION, VERIFY EACH AIR SPRING IS COMPLETELY DEFLATED. FAILURE TO DO SO COULD RESULT SERIOUS PROPERTY DAMAGE AND/OR SEVERE PERSONAL INJURY.

6. Lower the height control valve arm(s) to exhaust the air in the air springs and deflate the rear suspension as per the vehicle manufacturer's instructions.
7. Clean and lubricate the lower mounting fasteners of both air springs with penetrating oil. This will help prevent the air spring mounting studs from breaking during the removal process.
8. Remove the lower mounting fasteners from both air springs using **HAND TOOLS** only, refer to Air Spring in this section.

WARNING

IT IS MANDATORY TO USE A FLOOR JACK EQUIPPED WITH A FOUR INCH CONTACT PLATE TO SUPPORT THE U-BEAM ASSEMBLY AT THE CROSS TUBE TO FACILITATE SAFE LOWERING AND RAISING OF THE U-BEAM ASSEMBLY. DO NOT USE A BOTTLE JACK. A BOTTLE JACK DOES NOT HAVE ENOUGH CONTACT AREA AND CAN BE UNSTABLE. FAILURE TO DO SO CAN CAUSE COMPONENT DAMAGE OR RESULT IN PERSONAL INJURY.

WARNING

THE WEIGHT OF THE U-BEAM ASSEMBLY IS APPROXIMATELY 225 POUNDS. CARE SHOULD BE TAKEN AT REMOVAL AND INSTALLATION TO PREVENT PERSONAL INJURY OR DAMAGE TO COMPONENTS.

9. Support the U-beam assembly with a floor jack that is equipped with a 4" contact plate.
10. Remove the D-pin fasteners from both sides of the support beam.
11. Raise the front of the differential to facilitate removal of the D-pins from the bottom caps.
12. Lower the floor jack to pivot the U-beam assembly down from the bottom caps.
13. Remove the lower shock absorber mounting fastener from the side being serviced.
14. Pivot the lower shock mount out of the bottom cap.
15. Remove the S-cam support bracket fasteners and support bracket (if equipped), see Figure 8-28.
16. Remove and discard the U-bolt fasteners from the clamp group.
17. Remove the bottom cap and inspect for damage or wear. Replace as necessary.

FIGURE 8-28

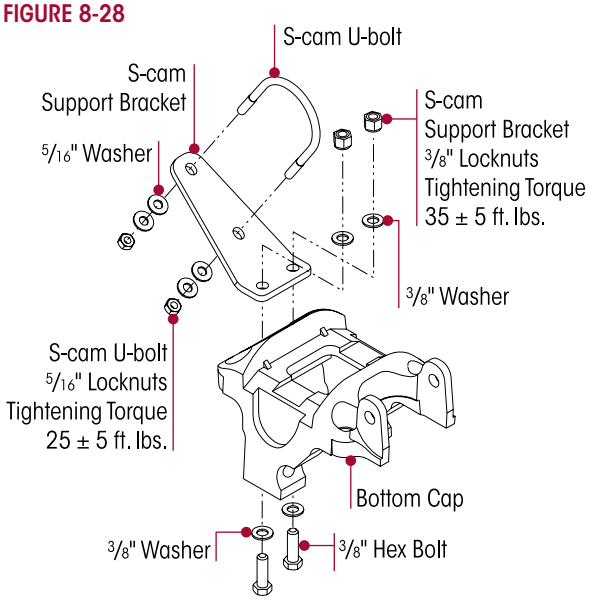

ASSEMBLY

NOTE

The models PRIMAAX EX 26K • 52K, PRIMAAX 260 • 520, may be equipped with top pads and bottom caps that are contoured to fit the axle housing on the axle's short arm side. Ensure the correct components are installed at each location in the proper orientation, refer to the Bottom Cap Selection Guides in Parts List Section of this publication.

1. Install the top pad (if removed) on the top of the axle engaging the dowel pin. Care should be taken to ensure the taller ear of the top pad is mounted to the inboard side of the suspension, see Figure 8-29.

FIGURE 8-29

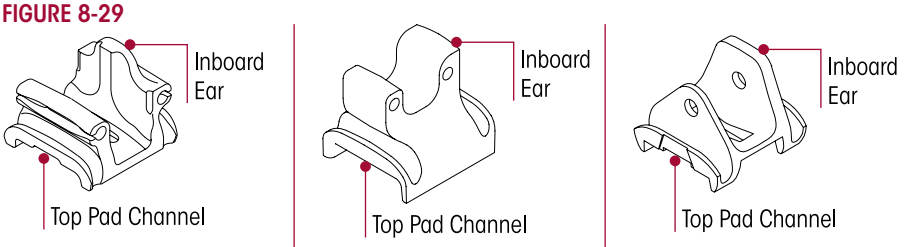

PRIMAAX EX 23K•46K•69K | 26KS•52KS

PRIMAAX EX 26K•52K
PRIMAAX 260•520

PRIMAAX 230•460•690

FIGURE 8-30

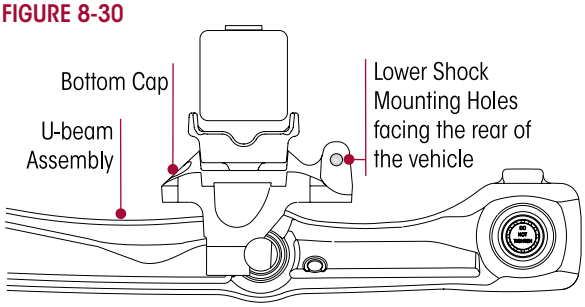

2. Install the bottom cap and axle spacer (if equipped) on the axle in the proper direction, with the lower shock mounting holes facing the rear of the vehicle, see Figure 8-30.
3. Install the new U-bolts. Verify that the U-bolts are seated properly in the top pad channels and through the bottom cap.

NOTE Current Hendrickson Truck Suspension Systems U-bolt locknuts for the PRIMAAX EX • PRIMAAX suspension are ¾" -16 Grade C and are phosphate and oil coated.

4. Install the U-bolt washers and the locknuts and hand tighten, **DO NOT** tighten to torque at this time.

⚠ CAUTION PRIOR TO TIGHTENING THE U-BOLTS TO THE FINAL TORQUE, ENSURE THE U-BEAM ASSEMBLY AND THE BOTTOM CAP ASSEMBLY ARE CENTERED ON THE AXLE (A = B ± 1/8"), SEE FIGURE 8-31. FAILURE TO DO SO COULD CAUSE PREMATURE COMPONENT WEAR OR CAUSE UNEVEN LOAD DISTRIBUTION.

5. Center the cross tube, support beam, and the bottom cap assembly on the axle (A = B ± 1/8"), see Figure 8-31.

FIGURE 8-31

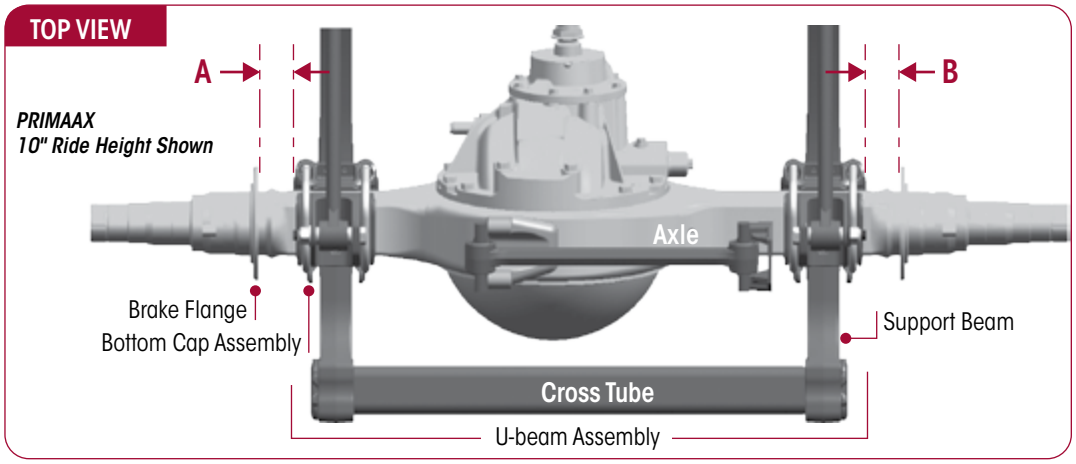

SERVICE HINT It may be necessary to raise or lower the front of the differential to allow the D-pins to engage the bottom cap.

6. Raise the U-beam assembly until the D-pins engage in the bottom cap.
7. Install the D-pin fasteners with the bolt heads on the forward side of the bottom cap, see Figure 8-27.
8. Lower the front differential to allow the full engagement of the D-pins into the bottom caps.

FIGURE 8-32

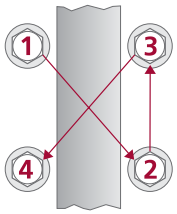

9. Prior to tightening the D-pin fasteners, verify the bottom cap is centered over the support beam.
10. Tighten the D-pin locknuts to 300 ± 25 foot pounds torque.
11. Tighten the U-bolt locknuts evenly in 50 foot pounds increments in the proper pattern to achieve uniform bolt tension, see Figure 8-32.
12. Rap the top of the U-bolts with a dead blow mallet and retighten to the proper torque. **DO NOT** exceed specified torque on U-bolt locknuts. Tighten the ¾" locknuts to 375 ± 25 foot pounds torque.
13. Pivot the shock back into the lower shock mount and install the lower shock absorber mounting fastener. Tighten the ⅝" locknuts to 213 ± 12 foot pounds torque.
14. Install the S-cam support bracket and fasteners (if equipped). Tighten the ⅜" locknuts to 35 ± 5 foot pounds torque. Tighten the 5/16" locknuts to 25 ± 5 foot pounds torque.
15. Install the air spring between the frame and the cross tube, refer to Air Spring in this section.
16. Install the tires (if removed).
17. Remove the jack stands and lower the frame of vehicle.
18. See additional Air Spring Cautions and Warnings in the Important Safety Notice Section of this publication prior to deflating or inflating the air system.
19. Connect the height control valve linkage rod(s) to the height control valve arm(s) to inflate the suspension as per the vehicle manufacturer's instructions.
20. Remove the wheel chocks the vehicle.

S-CAM SUPPORT BRACKET (if equipped)

DISASSEMBLY

1. Chock the wheels.
2. Remove the S-cam U-bolt fasteners, see Figure 8-33.
3. Remove the S-cam U-bolt from the bracket and the S-cam housing.
4. Remove the fasteners connecting the S-cam support bracket from the bottom cap.
5. Remove the bracket and inspect components for wear or damage. Replace as necessary.

FIGURE 8-33

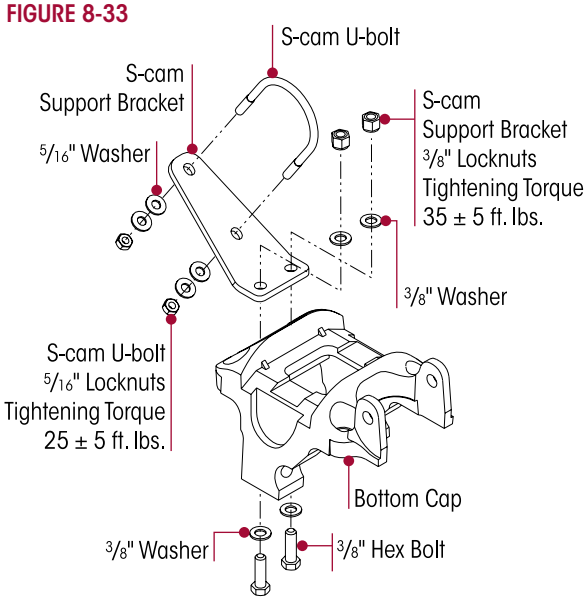

ASSEMBLY

1. Install the bracket on top of the bottom cap.
2. Install the S-cam ⅜" bolts, washers, and locknuts must be installed with the bolt heads on the underside of the bottom cap, see Figure 8-33. Tighten the locknuts to 35 ±5 foot pounds.

SERVICE HINT S-cam ⅜" bolts must be installed with the bolt heads on the underside of the bottom cap to prevent interference between the U-beam assembly and the bolt fasteners during articulation.

3. Install the U-bolt around the S-cam housing and through the S-cam support bracket.

4. Install the 5⁄16" washers and locknuts. Tighten the locknuts to 25 ± 5 foot pounds.
5. Remove the wheel chocks.

AXLE STOPS

DISASSEMBLY

1. Chock the wheels.
2. Remove the fasteners connecting the axle stop to the frame.
3. Remove the axle stop.
4. Inspect the frame rail mounting surfaces for any cracks or damage.

ASSEMBLY

1. Install the axle stop on the frame.
2. Install new mounting fasteners.
3. Tighten axle stop fasteners to the vehicle manufacturer's torque specifications.
4. Install any items removed
5. Remove the wheel chocks.

FRAME HANGER

WARNING THIS PROCEDURE TO REPLACE A FRAME HANGER, IS DONE WITH THE REMAINING FRAME HANGERS CONNECTED TO THE FRAME AND IT IS ALSO NECESSARY THAT THE U-BEAM ASSEMBLY AND THE LONGITUDINAL TORQUE RODS ARE ATTACHED TO THE REMAINING FRAME HANGERS. FAILURE TO DO SO COULD CAUSE THE AXLE TO SHIFT RESULTING IN POSSIBLE DAMAGE TO COMPONENTS OR PERSONAL INJURY.

SERVICE HINT Increasing the pinion angle may facilitate the disassembly/assembly of the frame hanger. To increase the pinion angle, place a floor jack under the axle pinion and raise slightly. This will increase the pinion angle slightly easing disassembly/assembly.

DISASSEMBLY

1. Chock the front wheels.
2. Support the frame.
3. Disconnect the height control valve assembly from height control valve arm, see vehicle manufacturer's instructions.

WARNING PRIOR TO AND DURING DEFLATION AND INFLATION OF THE AIR SUSPENSION SYSTEM, ENSURE THAT ALL PERSONNEL AND EQUIPMENT ARE CLEAR FROM UNDER THE VEHICLE AND AROUND THE SERVICE AREA, FAILURE TO DO SO CAN CAUSE SERIOUS PERSONAL INJURY, DEATH, OR PROPERTY DAMAGE.

4. See additional Air Spring Cautions and Warnings in the Important Safety Notice Section of this publication prior to deflating or inflating the air system.

WARNING SOME VEHICLE APPLICATIONS, SUCH AS VEHICLES EQUIPPED WITH OUTRIGGERS, RETAIN SOME AIR PRESSURE IN THE AIR SPRINGS AT ALL TIMES. PRIOR TO PERFORMING ANY MAINTENANCE, SERVICE, OR REPAIR OF THE SUSPENSION, VERIFY EACH AIR SPRING IS COMPLETELY DEFLATED. FAILURE TO DO SO COULD RESULT SERIOUS PROPERTY DAMAGE AND/OR SEVERE PERSONAL INJURY.

5. Lower the height control valve arm(s) to exhaust the air in the air springs and deflate the rear suspension as per the vehicle manufacturer's instructions.

SERVICE HINT Each frame hanger will have a pair of QUIK-ALIGN collars. Any eccentric (with the square drive feature) QUIK-ALIGN collar should be mounted on the outboard side of the frame hanger. Axle thrust angles can only be corrected on frame hangers equipped with eccentric QUIK-ALIGN collars.

NOTE Mark the position of the QUIK-ALIGN **square drive** in relationship to the frame hanger and note the **orientation of the fasteners** prior to loosening the QUIK-ALIGN connection. This will facilitate the axle alignment process after the repair is complete.

6. Remove the QUIK-ALIGN fasteners and collars, see Figure 8-34. Discard the fasteners. The collars may be reused if they are not damaged.

SERVICE HINT Note the quantity of shims removed to maintain the correct pinion angle of the axle at assembly. See Alignment & Adjustments Section of this publication.

FIGURE 8-34

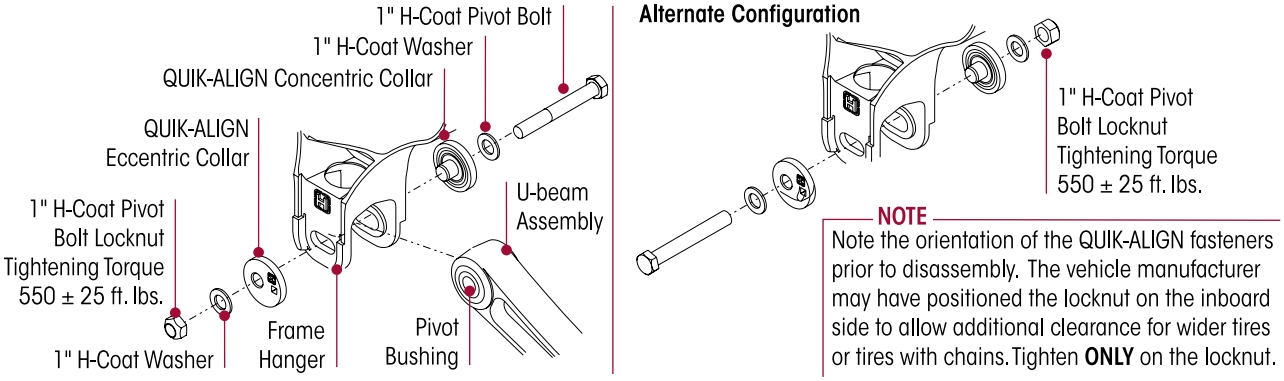

7. Remove the fasteners and shim (if equipped) that attach the longitudinal torque rod to the frame hanger.
8. Remove the fasteners that attach the frame hanger to the vehicle per vehicle manufacturer's specifications.
9. Remove the frame hanger.
10. Inspect mounting surface for any damage or wear.
11. Inspect the QUIK-ALIGN pivot bushing and torque rod bushings for wear or damage, replace as necessary.

ASSEMBLY

1. Slide the new frame hanger over the QUIK-ALIGN pivot bushing.
2. Install the new fasteners that attach the frame hanger to the vehicle and tighten per the vehicle manufacturer's specifications.

⚠ WARNING

DISCARD USED QUIK-ALIGN FASTENERS. ALWAYS USE NEW QUIK-ALIGN FASTENERS TO COMPLETE A REPAIR. FAILURE TO DO SO COULD RESULT IN FAILURE OF THE PART, OR MATING COMPONENTS, ADVERSE VEHICLE HANDLING, PERSONAL INJURY, OR PROPERTY DAMAGE.

DO NOT ASSEMBLE QUIK-ALIGN JOINT WITHOUT THE PROPER FASTENERS. USE ONLY H-COATED FASTENERS TO SUSTAIN PROPER CLAMP FORCE. FAILURE TO DO SO CAN CAUSE ADVERSE VEHICLE HANDLING, PROPERTY DAMAGE OR PERSONAL INJURY AND VOID WARRANTY. ENSURE THAT THE QUIK-ALIGN FASTENER'S TORQUE VALUES ARE SUSTAINED AS RECOMMENDED IN THE TORQUE SPECIFICATIONS SECTION OF THIS PUBLICATION. FAILURE TO DO SO CAN CAUSE ADVERSE VEHICLE HANDLING RESULTING IN PERSONAL INJURY OR PROPERTY DAMAGE. FOLLOW VEHICLE MANUFACTURER'S FASTENER ORIENTATION WHEN PERFORMING ANY MAINTENANCE, SERVICE OR REPAIR.

NOTE Use a new QUIK-ALIGN pivot bolt kit (see the Parts List Section of this publication) for any axle alignment or disassembly of the QUIK-ALIGN connection. This will help ensure that the proper clamp load is applied to the connection and help prevent the joint to slip in service.

3. Install the QUIK-ALIGN collars and the new mounting hardware that attach the U-beam assembly to the frame hanger, see Figure 8-34. Verify that the nose of each QUIK-ALIGN collar is installed correctly into pivot bushing sleeve, and the flanged side is flat against the frame hanger face within the alignment guides. Snug QUIK-ALIGN locknuts to 🔧 50-100 foot pounds torque, **DO NOT** tighten at this time.
4. Install the torque rod mounting fasteners and reinstall any shims that were removed during disassembly. Tighten the fasteners to the proper specification, see Torque Specifications Section of this publication per model designation.
5. See additional Air Spring Cautions and Warnings in the Important Safety Notice Section of this publication prior to deflating or inflating the air system.
6. Connect the height control valve linkage rod(s) to the height control valve arm(s) to inflate the suspension properly as per vehicle manufacturer's instructions.
7. Remove frame supports(s).
8. Verify that the axle is in proper alignment, see the Alignment & Adjustments Section of this publication.

NOTE It is mandatory to have the vehicle at proper ride height prior to tightening the 1.0" QUIK-ALIGN locknuts to torque specifications.

9. After the correct alignment of the axle is verified tighten the 1.0" QUIK-ALIGN locknuts to 🔧 550 ± 25 foot pounds torque.
10. Verify the correct pinion angle on the axle per original equipment manufacturer's specifications. Adjust as necessary per the Alignment & Adjustments Section of this publication.
11. Remove the chocks from the front wheels.

SECTION 9
Troubleshooting Guide

PRIMAAX EX • PRIMAAX TROUBLESHOOTING GUIDE		
CONDITION	**POSSIBLE CAUSE**	**CORRECTION**
Suspension has harsh or bumpy ride	Air spring not inflated to specification or damaged	Repair air system and check ride height. See vehicle manufacturer for ride height adjustment.
	Ride height set incorrectly	Adjust ride height to proper setting. See vehicle manufacturer for ride height adjustment.
	Suspension is overloaded	Redistribute load to correct weight.
	Broken support beam	Replace with U-beam assembly.
Irregular tire wear	Incorrect tire inflation pressure	Correct tire pressure per vehicle manufacturer and tire manufacturer specifications.
	Incorrect alignment	Correct the alignment. Refer to the Alignment & Adjustments Section.
	Worn QUIK-ALIGN bushing	Replace QUIK-ALIGN bushing.
	Loose QUIK-ALIGN attachment	Replace QUIK-ALIGN connection, and check vehicle alignment. Adjust if necessary. Check frame hanger for wear around QUIK-ALIGN plates and replace if necessary.
	Worn torque rod bushings	Replace torque rod bushings as necessary.
Excessive driveline vibration	Incorrect pinion angle(s)	Adjust pinion angle(s), refer to the vehicle manufacturer's specifications.
	Loose QUIK-ALIGN attachment	Replace QUIK-ALIGN connection, and check vehicle alignment. Adjust if necessary. Check frame hanger for wear around QUIK-ALIGN plates and replace if necessary.
	Ride height set incorrectly	Adjust ride height to proper setting. See vehicle manufacturer for ride height adjustment.
	Broken support beam	Replace with U-beam assembly.
Suspension is noisy	Loose QUIK-ALIGN attachment	Replace QUIK-ALIGN connection, and check vehicle alignment. Adjust if necessary. Check frame hanger for wear around QUIK-ALIGN plates and replace if necessary.
	Loose U-bolts	Tighten U-bolts to specifications, see Preventive Maintenance Section.
	Loose end caps (if equipped)	Inspect end caps and the support beam to cross tube connection for damage. Repair as necessary, re-torque end cap to specification, see Torque Specifications Section.
	Worn bushings	Replace bushings as necessary.
Vehicle bouncing excessively	Damaged or leaking shock absorber	Replace shock absorber.
	Ride height set incorrectly	Adjust ride height to proper setting. See vehicle manufacturer for proper ride height adjustment.
Vehicle leaning	Air spring not inflated to specification or damaged	Repair air system and check ride height. See the vehicle manufacturer for proper ride height adjustment.
	Load not centered	Redistribute the load.
	Frame twisted	Straighten the frame per the vehicle manufacturer's guidelines.
	Broken support beam	Replace with U-beam assembly.
	Axle housing bent or broken	Replace axle housing per the vehicle manufacturer's guidelines and align vehicle.
	Loose U-bolts	Tighten U-bolts to specifications, see Preventive Maintenance Section.
	Front suspension	Inspect and repair front suspension.

Pro Gear and Transmission • 906 W. Gore St. Orlando, FL 32805 • 1 (877) 776-4600 / (407) 872-1901 • parts@eprogear.com

PRIMAAX EX • PRIMAAX TROUBLESHOOTING GUIDE (cont.)		
CONDITION	**POSSIBLE CAUSE**	**CORRECTION**
Suspension will not reach ride height	Suspension is overloaded	Redistribute load to correct weight.
	Air Spring leaking or damaged	Replace air spring.
	Leak in air system	Inspect air fittings, see Air Fitting Inspection in the Preventive Maintenance Section of this publication. If necessary, repair air system and check ride height. See the vehicle manufacturer for proper ride height adjustment.
	Air line obstructed or improperly connected	Repair air system and check ride height. See the vehicle manufacturer for proper ride height adjustment.
	Height control valve dump port activated	Check height control valve dump port for proper connection and function per the vehicle manufacturer's guidelines
Air springs deflate when parked	Leak in air system	Inspect air fittings, see Air Fitting Inspection in the Preventive Maintenance Section of this publication. If necessary, repair air system and check ride height. See the vehicle manufacturer for proper ride height adjustment.
	Malfunctioning height control valve	Replace malfunctioning height control valve per the vehicle manufacturer's guidelines.
Excessive frame slope	Ride height set incorrectly	Adjust the ride height to proper setting per the vehicle manufacturer's guidelines.
	Suspension is overloaded	Redistribute load to correct weight

SECTION 10
Torque Specifications

HENDRICKSON RECOMMENDED TORQUE VALUES PROVIDED IN FOOT POUNDS AND IN NEWTON METERS

QUIK-ALIGN • D-PIN CONNECTION

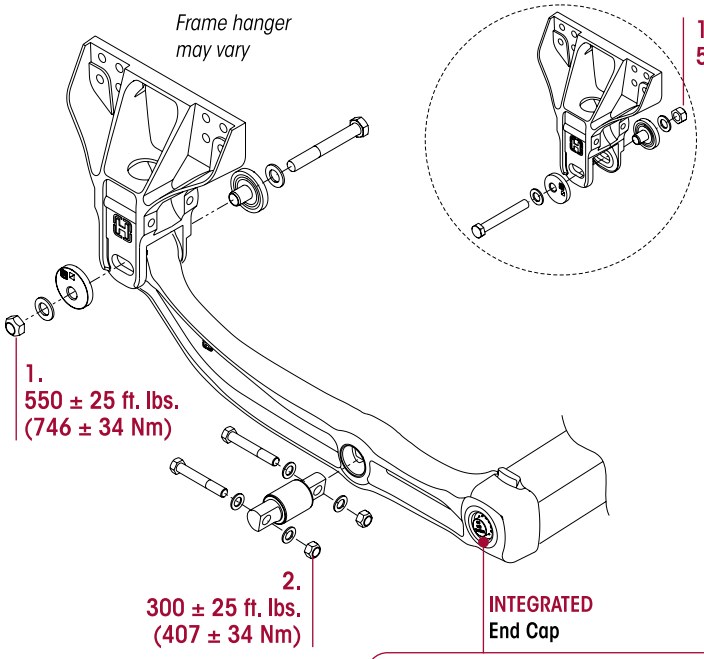

1.
550 ± 25 ft. lbs. (746 ± 34 Nm)

ALTERNATE CONFIGURATION of the QUIK-ALIGN fasteners. The locknuts located inboard will allow additional clearance for wider tires or tires with chains. Tightening to torque is still **required** on the locknut.

Vehicles built PRIOR to March 2009

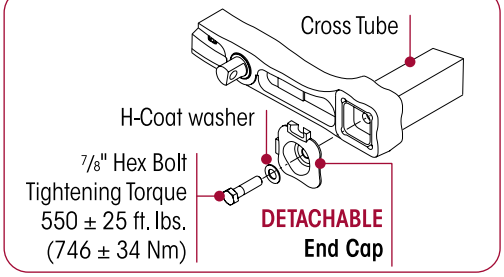

RE-TORQUE NOT REQUIRED for vehicles built after 9/2010. Tamper Resistant Cap attached to integrated end cap bolts with SIKAFLEX 221 sealant applied around the cap

NO.	COMPONENT		*FASTENER		TORQUE VALUE	
			**Quantity	Size	Foot Pounds	Newton Meters
1	U-beam Assembly	QUIK-ALIGN Bushing Locknut	2	1"-14 UNF	550 ± 25	746 ± 34
2		D-Pin Bushing Locknut	4	¾"-16 UNF	300 ± 25	407 ± 34
				⅞"-14 UNF		

TRANSVERSE TORQUE ROD

Transverse TRAAX ROD and ULTRA ROD
Torque rod fasteners are not supplied by Hendrickson. Refer to vehicle manufacturer's torque specifications.

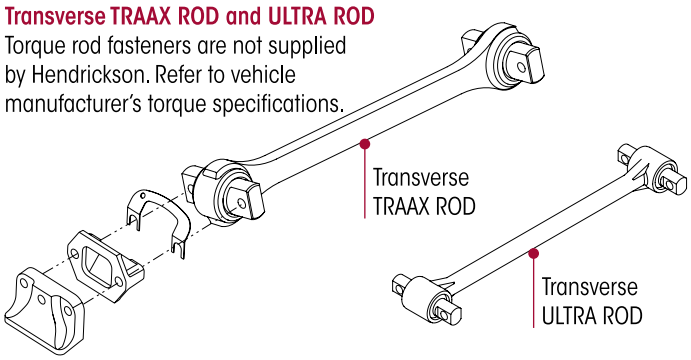

NOTES

* Frame fasteners are furnished and installed by the vehicle manufacturer. Torque values listed apply only if Hendrickson supplied fasteners are used. If non-Hendrickson fasteners are used, refer to vehicle manufacturer's torque specifications.

** Quantity shown are per axle. Double for tandem, triple for tridem.

LONGITUDINAL TORQUE ROD

PRIMAAX EX 23K•46K•69K•26K S•52K S

S - designates small clamp group

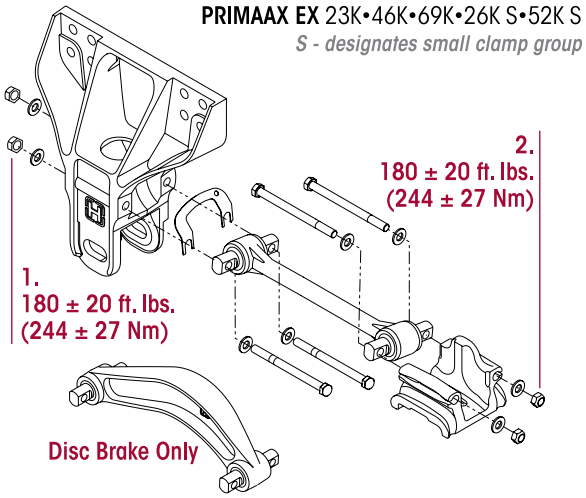

PRIMAAX EX 26K•52K

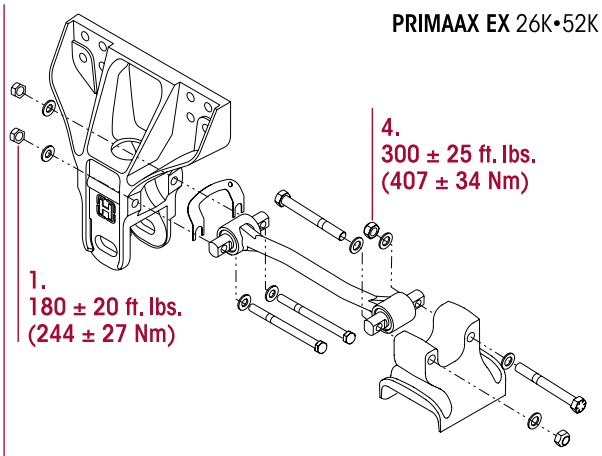

PRIMAAX EX 23KT•26KT

T - designates tall ride height

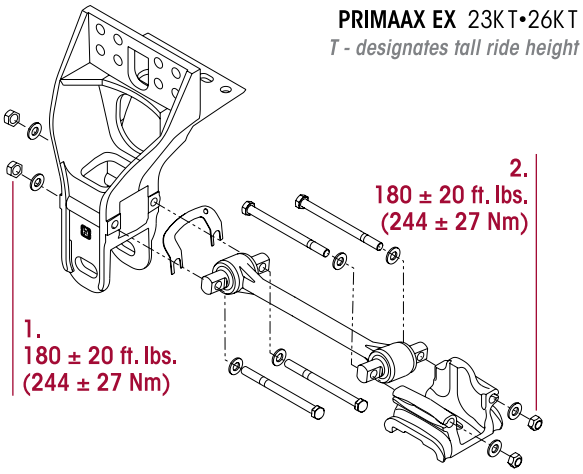

PRIMAAX 260•520

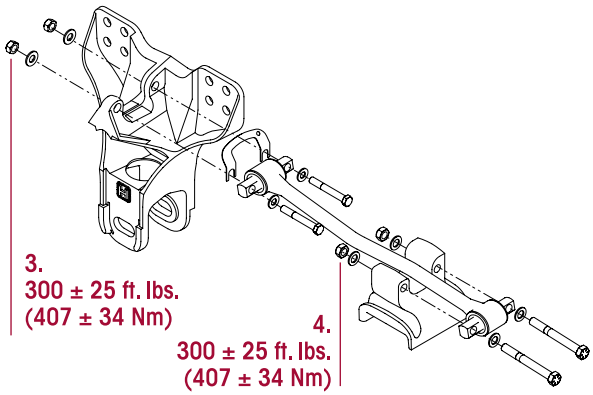

PRIMAAX 230•460•690

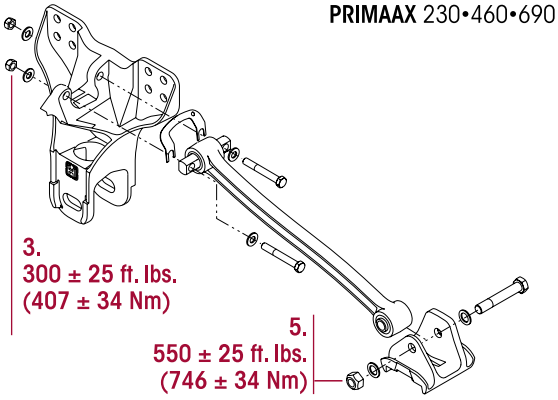

Rear Tandem and Tridem Axle
Longitudinal Torque Rod/ Top Pad Assembly

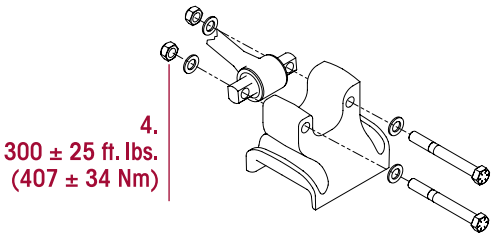

NO.	COMPONENT		*FASTENER		TORQUE VALUE	
			**Quantity	Size	Foot Pounds	Newton Meters
1	Longitudinal Torque Rod	to Forward Hanger Mount	4	5/8"-11 UNC	180 ± 20	244 ± 27
2		to Rear Top Pad Mount	4	5/8"-11 UNC	180 ± 20	244 ± 27
3		to Forward Hanger Mount	4	3/4"-16 UNF	300 ± 25	407 ± 34
4		to Rear Top Pad Mount	4	3/4"-16 UNF	300 ± 25	407 ± 34
5		to Rear Top Pad Mount	2	7/8"-14 UNF	550 ± 25	746 ± 34

AIR SPRINGS

PRIMAAX EX 23K•46K•69K
PRIMAAX 230•460•690

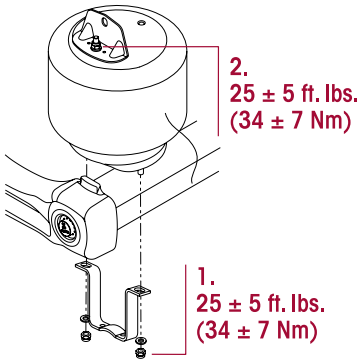

PRIMAAX EX 26K•52K•26K S•52K S
PRIMAAX 260•520

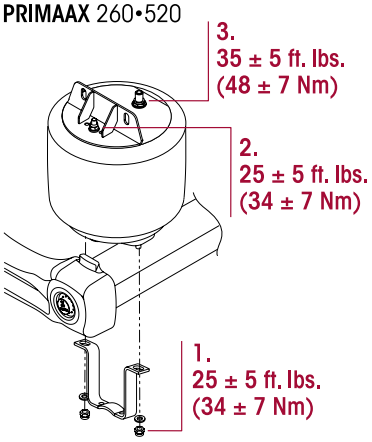

PRIMAAX EX 23KT•26KT

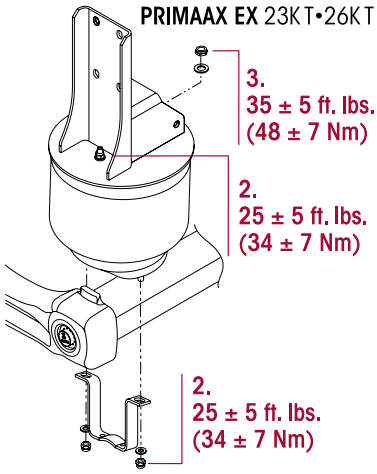

NO.	COMPONENT	*FASTENER		TORQUE VALUE	
		**Quantity	Size	Foot Pounds	Newton Meters
1	Lower Air Spring Bracket to Cross Tube	4	½"-13 UNC	25 ± 5	34 ± 7
2	Upper Air Spring Assembly	2	½"-13 UNC	25 ± 5	34 ± 7
3	Upper Air Spring Assembly to Air Spring Bracket	2	¾"-16 UNF	25 ± 5	34 ± 7

SHOCK ABSORBER

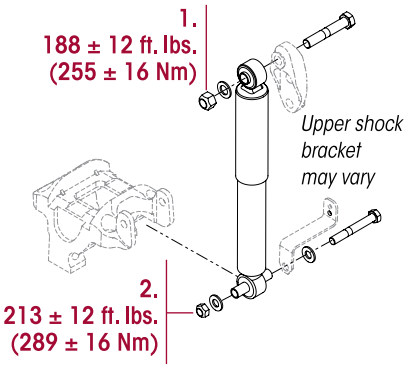

U-BOLTS

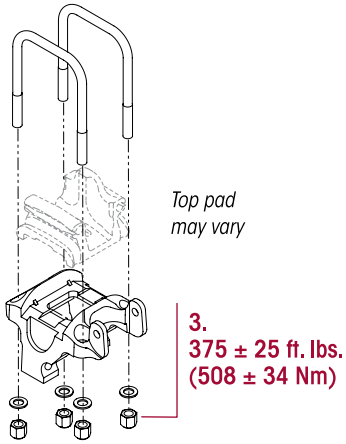

S-CAM

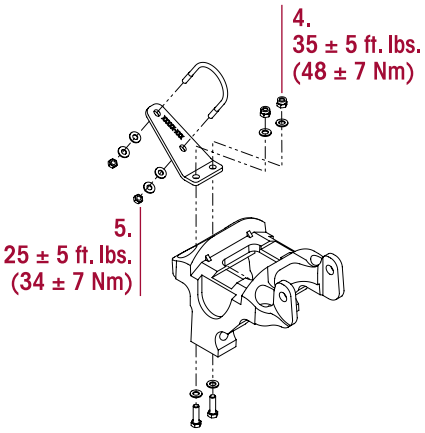

NO.	COMPONENT	*FASTENER		TORQUE VALUE	
		**Quantity	Size	Foot Pounds	Newton Meters
1	Upper Shock Absorber Locknuts	2	¾"-10 UNC	188 ± 12	255 ± 16
2	Lower Shock Absorber Locknuts	2	⅝"-11 UNC	213 ± 12	289 ± 16
3	U-bolt Locknuts	8	¾"-16 UNF	375 ± 25	508 ± 34
4	S-cam Support Bracket To Bottom Cap Mount	4	⅜"-16 UNC	35 ± 5	48 ± 7
5	S-cam Support Bracket To U-bolt Locknuts	4	5⁄16"-18 UNC	25 ± 5	34 ± 7

Actual product performance may vary depending upon vehicle configuration, operation, service and other factors.
All applications must comply with applicable Hendrickson specifications and must be approved by the respective vehicle manufacturer with the vehicle in its original, as-built configuration.
Contact Hendrickson for additional details regarding specifications, applications, capacities, and operation, service and maintenance instructions.

*Call your truck dealer or Hendrickson at **1.866.755.5968** (toll-free) or **1.630.910.2800** for additional information.*

HENDRICKSON
www.hendrickson-intl.com

TRUCK COMMERCIAL VEHICLE SYSTEMS
800 South Frontage Road
Woodridge, IL 60517-4904 USA
1.866.755.5968 (Toll-free U.S. and Canada)
1.630.910.2800 (Outside U.S. and Canada)
Fax 1.630.910.2899

17730-263 Rev F 06-19