Advance 306B Transfer Case Service Manual

Pro Gear and Transmission presents Advance 306B transfer case service manual to assist in identifying the parts for your Advance unit.

If you need any assistance identifying the correct transfer case unit or replacement parts for your truck and equipment, contact the specialists at Pro Gear and Transmission.

Pro Gear stocks every part for your transfer case including: gears, shafts assemblies, bearings, gaskets, rings, pins, and much more.

Pro Gear Transmission has same day shipping and 1000's of products in stock and ready to ship internationally for your next project.

For parts or service contact the Advance specialists at Pro Gear & Transmission, Inc.

1 (877) 776-4600
(407) 872-1901
parts@eprogear.com

Check Inventory | Email Us | Call Us

Model 306 Transfer Case
Service Manual

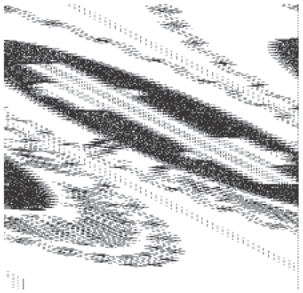

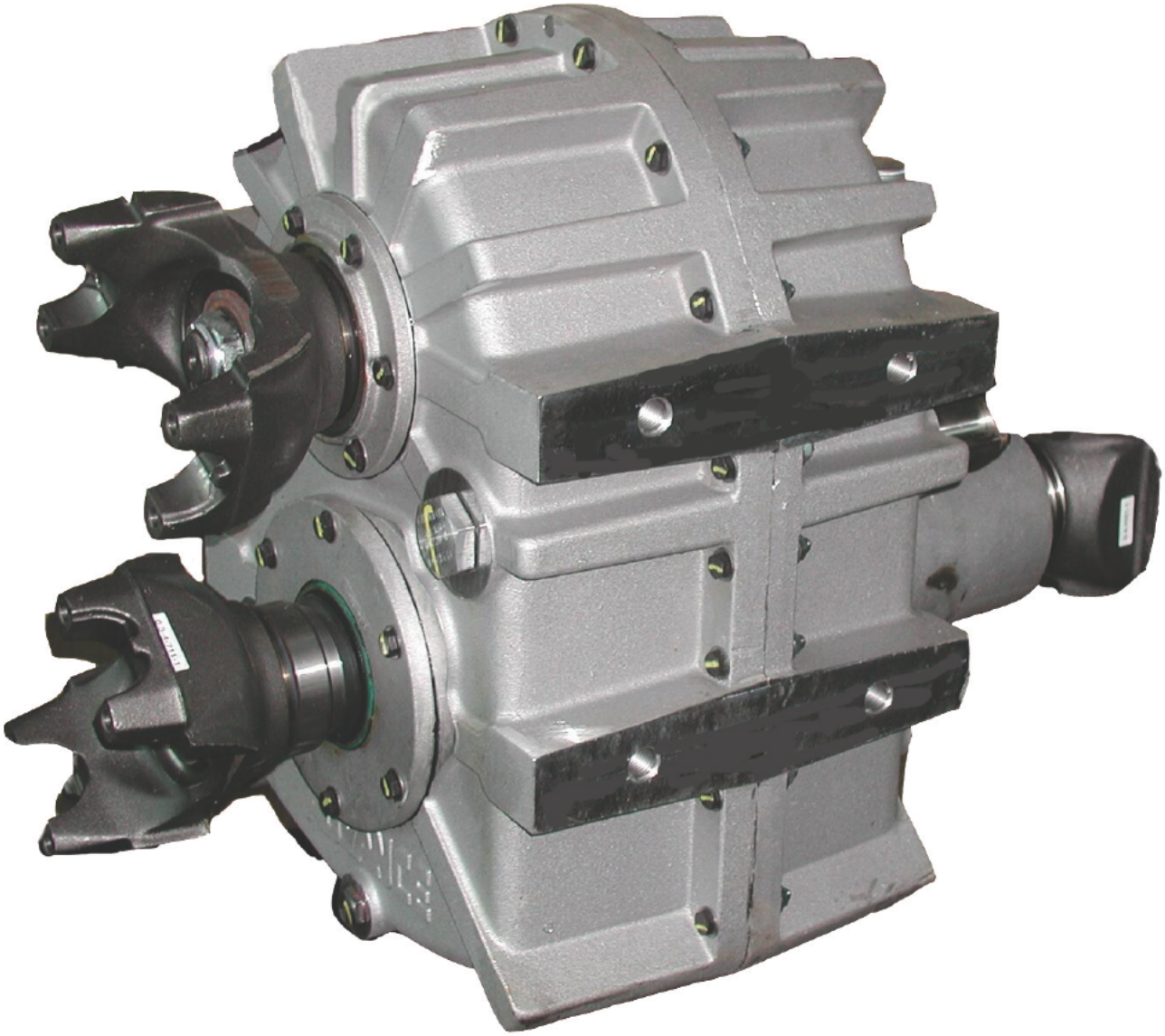

5/2006

Model 306 Exterior Component Location & Identification

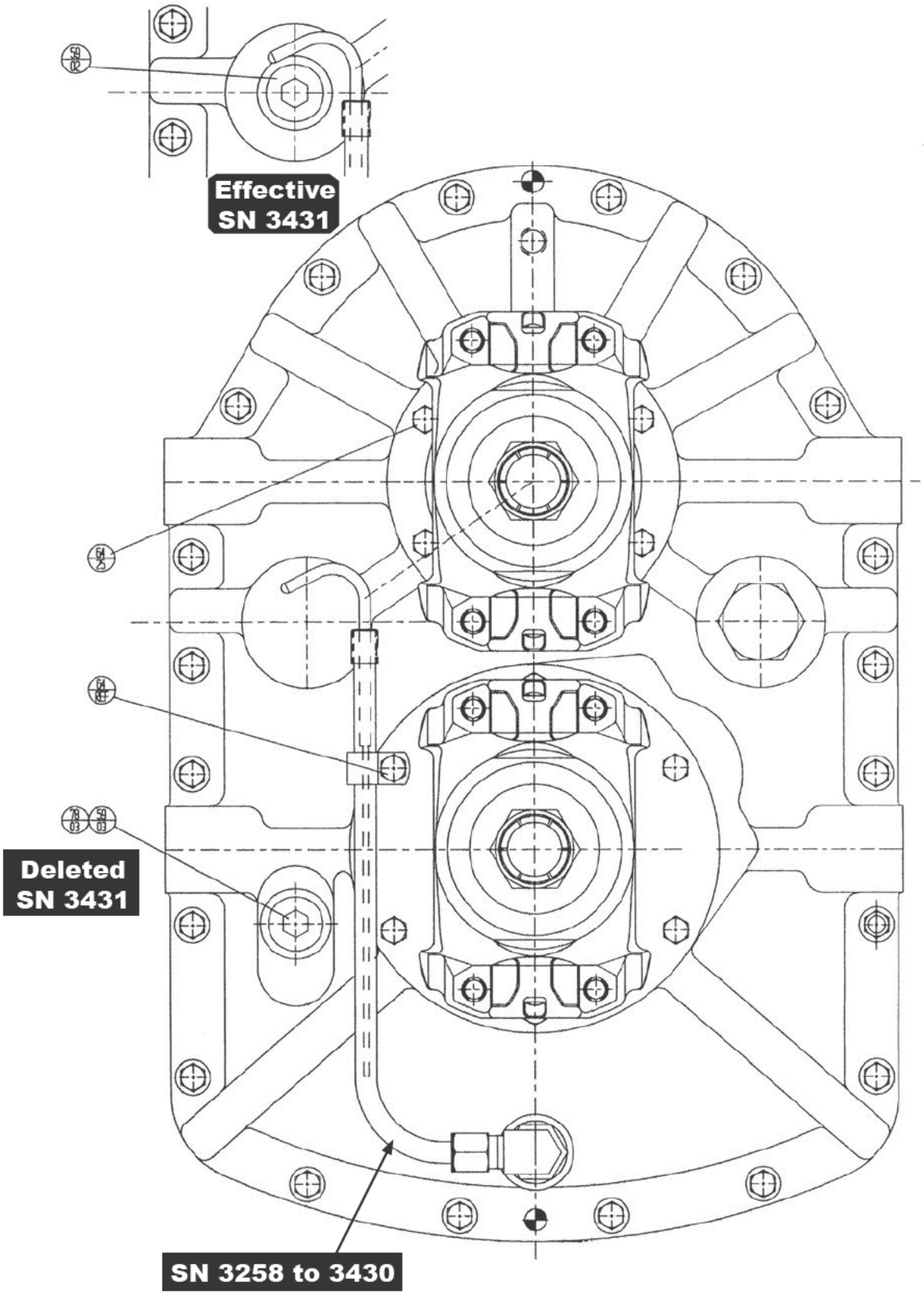

Pro Gear and Transmission • 906 W. Gore St. Orlando, FL 32805 • 1 (877) 776-4600 / (407) 872-1901 • progearandtransmission.com • parts@eprogear.com

Model 306 Exterior Component Location & Identification

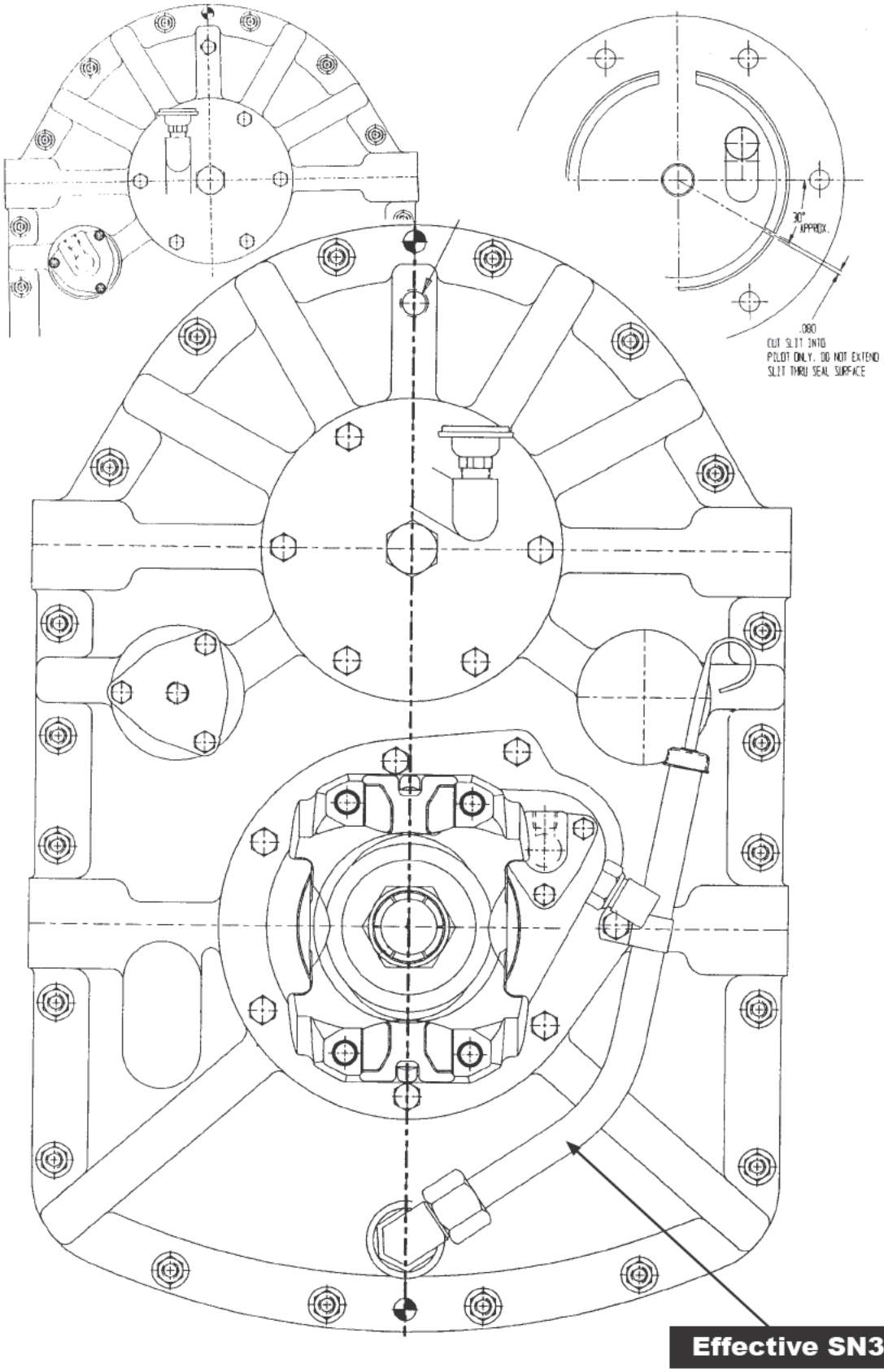

Model 306 Component Location & Identification

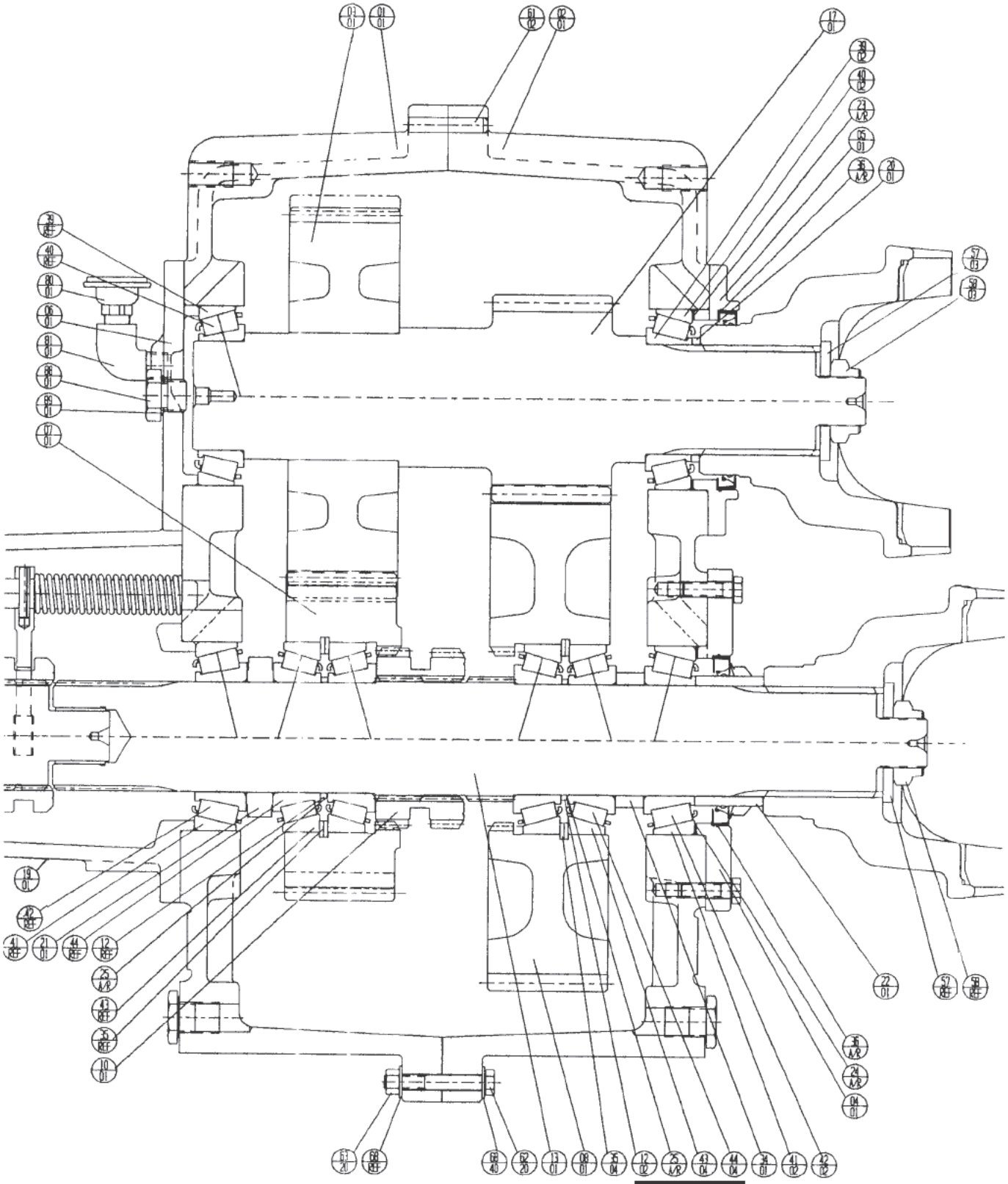

See page 6

Model 306 Exterior Component Location & Identification

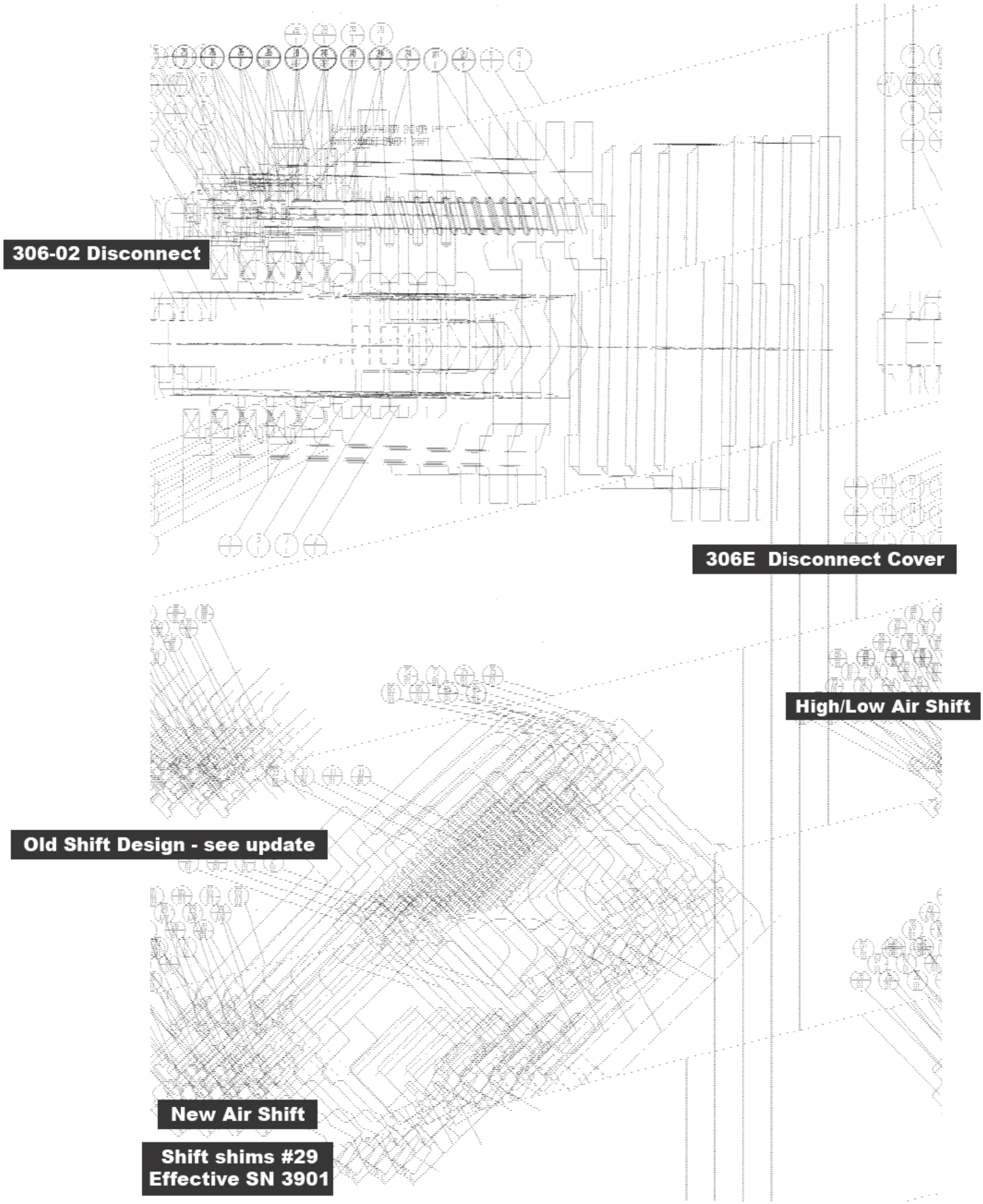

Pro Gear and Transmission • 906 W. Gore St. Orlando, FL 32805 • 1 (877) 776-4600 / (407) 872-1901 • progearandtransmission.com • parts@eprogear.com

LUBRICATION

Recommended Change Schedule For "On Highway"

	Prior To SN 3855	Effective SN3855-3900	Effective SN3901-up
Recommended Lubricant	SAE15W40	75W90Synthetic	75W90Synthetic
Initial Flush & Change	1,000mi/24hr	3,000mi/50hr	3,000mi/50hr
Scheduled Flush & Change	10,000mi/250hr	50,000mi/500hr	50,000mi/500hr
Check Oil Level	2,000mi/100hr	2,000mi/100hr	2,000mi/100hr

NOTE

To assure an appropriate operating oil level it is strongly suggested that 11.5qt be used as a fill quantity and that the dipstick be marked at this level. This will assure appropriate bearing lubrication with all units and all single or compound transfer case installation angles. To adapt older units, remove the front input bearing cover. Add a .08 slit as shown on pg. 3 and reinstall with RTV in the new rotated position. Be sure to retain and reinstall all bearing shims.

Breather Locations

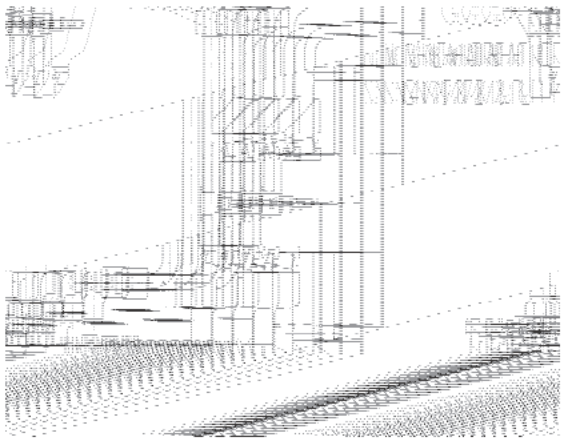

Gear Assembly Arrangements

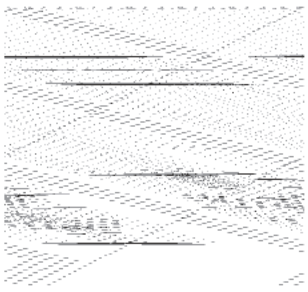

SN 101 - 416

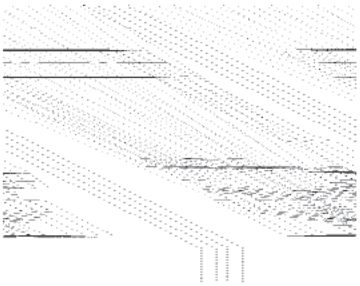

SN 417 - 700

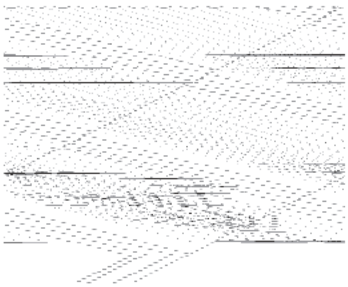

SN 701 - 999

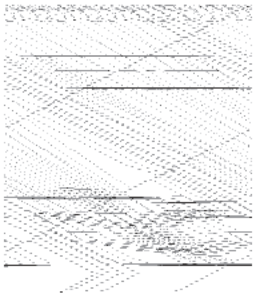

SN 1000 & UP

Pro Gear and Transmission • 906 W. Gore St. Orlando, FL 32805 • 1 (877) 776-4600 / (407) 872-1901 • progearandtransmission.com • parts@eprogear.com

306-11 Jake Brake Gear Retention Kit

Assembly Instructions
Model 306-11 "Jake Brake" Gear Retention Kit

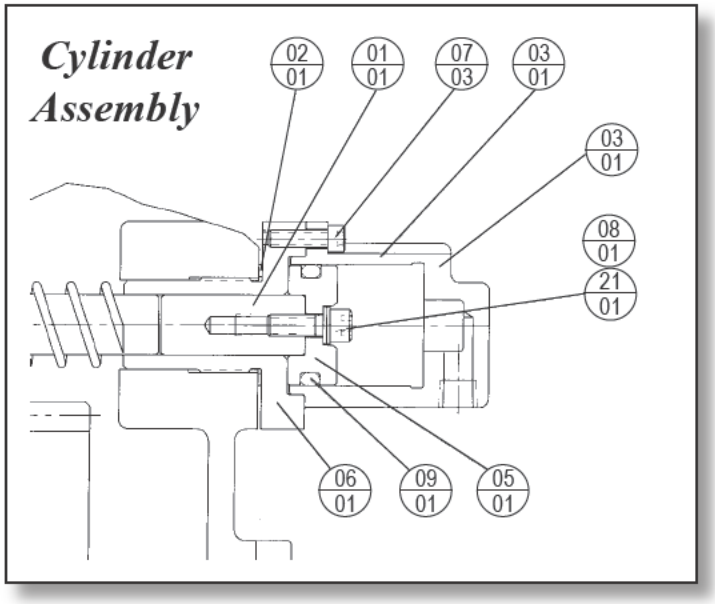

The kit can be assembled to the transfer case without the necessity of removing the unit from the truck. It will fit all units SN1291 & up. Prior to beginning the installation, locate the air line to the original hi/lo shift cylinder located on the front face of the housing. This line will be the source of the "signal" pressure for the new valve. Also, locate a source of continuous system air pressure for the new cylinder. DO NOT use pressure from any of the brake system. The kit includes 1/4" tubing for "signal" pressure and 3/8" tubing for "actuation" pressure.

Block the vehicle securely and release the air pressure in the vehicle operating system not the brake system. Locate the shift rod housing hole cover (75) located on the rear face of the housing slightly below the input. The next step requires extreme caution. Since the cap is under shift spring pressure use extreme care in its removal. Unscrew the cap. Leave the shift return spring in place. Installation is best accomplished with the shift on the low side.

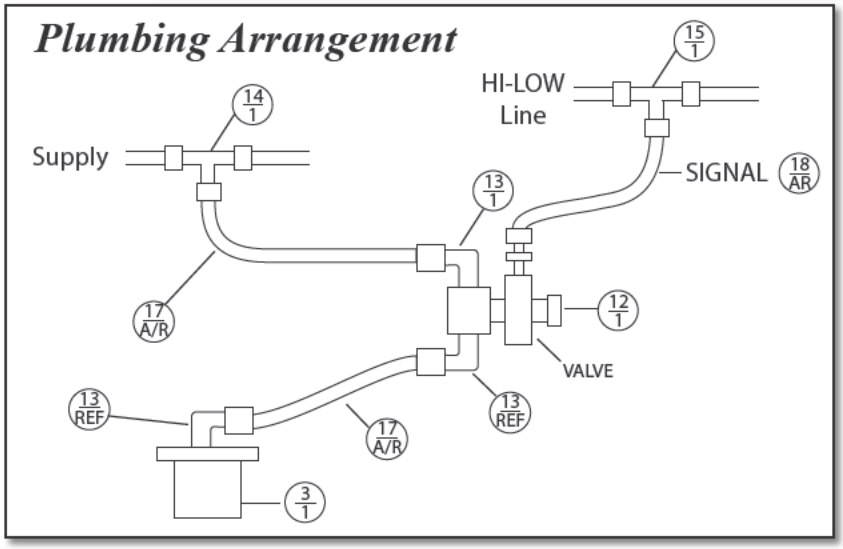

Apply the sealing washer (2) to the shift cylinder adapter and install the adapter taking care to index the shift shaft into the adapter during installation. Install piston (5) on extension shaft (1) using SHCS (8) and lock washer (21). Lightly oil o-ring (9) and install it on the piston. Insert the completed piston into the adapter. Lightly coat the inner surface of the cylinder (3) with oil and install it over the piston and sealing ring and retain it with 1/4-20 SHCS.

Mount the shift signal relay valve and plumb the new shift cylinder as shown on the plumbing diagram using the supplied tubing.

Item	Part Number	Qty	Part Name
1	306-40-7	1	Shift shaft extension - clutch retention
2	306-80-5	1	Adapter sealing washer
3	306-85-31	1	Shift cylinder - hi side
5	306-85-24	1	Shift piston - hi side
6	306-85-15	1	Shift cylinder adapter - hi side
7	1/4-20x1.00	3	Socket head cap screws - shift cylinder retention
8	5/16-18x1.00	1	Socket head cap screw - piston retention
9	AS-324	1	Piston sealing o-ring
12	WM147F359L2983	1	Shift signal relay valve
13	1469X6	3	3/8x1/4 NPT male ell
14	1464X6	1	3/8 union tee
15	1464X6X6X4	1	3/8x3/8x1/4 union tee
17	3/8ODx.031-N	AR	3/8 OD nylon tubing
18	1/4ODx.031-N	AR	1/4 OD nylon tubing
19	1/4-20x1.00	2	Hex head cap screw
20	1/4-20LN	2	Lock .nut
21	NL8G	1	Nordlok lock washer - piston screw

Pro Gear and Transmission • 906 W. Gore St. Orlando, FL 32805 • 1 (877) 776-4600 / (407) 872-1901 • progearandtransmission.com • parts@eprogear.com

Item	Qty	Part Number	Description	Where Used
1	1	306-10-1	Front housing - aluminum	306 all except 306D
	1	306-10-5	Front housing - iron	306D
2	1	306-10-2	Rear housing - aluminum	306 all except 306D
	1	306-10-6	Rear housing - iron	306D
3	1	306-10-7	Disconnect cover - front output	306E
4	1	306-20-1	Output bearing retainer	306 all
5	1	306-20-2	Input bearing retainer	306 all
6	1	306-20-3	Input bearing retainer - blank	306 all - thru SN 1471
	1	306-20-3	Input bearing retainer - tapped hole	306 all - SN1472 & up
7	1	306-30-1	Output gear - hi - 5P - 1:1	306 - use 306-30-11 & new brgs
	1	306-30-5	Output gear - hi - 5P - .86:1	306A - use 306-30-15 & new brgs
	1	306-30-7	Output gear - hi - 6P - 1:1	306 - use 306-30-17 & new brgs
	1	306-30-9	Output gear - hi - 6P - .86:1	306A - use 306-30-19 & new brgs
	1	306-30-11	Output gear - hi - 5P - 1:1	306
	1	306-30-15	Output gear - hi - 5P - .86:1	306A
	1	306-30-17	Output gear - hi - 6P - 1:1	306B, 306D
	1	306-30-19	Output gear - hi - 6P - .86:1	306C, 306E
8	1	306-30-2	Output gear - low - 5P	306, 306A
	1	306-30-12	Output gear - low - 6P	306B, 306C, 306E
9	1	306-30-4	Input gear - hi - 5P - 1:1	306 - service with 306S-3
	1	306-30-6	Input gear - hi - 5P - .86:1	306A - service with 306S-4
	1	306-30-8	Input gear - high - 6P- 1:1	306B, 306D - service with 306S-1
	1	306-30-10	Input gear - high - 6P - .86:1	306C, 306E - service with 306S-2
10	1	306-35-3	High-Low shift collar	306 all
12	2	306-60-10	Output gear bearing cone spacer	306 all - SN 1000 & up - see pg 6
13	1	306-40-1	Output shaft	306 all
15	1	306-40-10	High-low shift shaft - See # 37	306 all
17	1	306-45-1	Input shaft with pinion	NSS - see serv. kits following #89
18	1	306-50-1	High-low shift fork - See # 37	306 all
19	1	306-02	Disconnect assembly-See page 4	306 all
20	1	306-60-1	Input yoke spacer	306 all
21	1	306-60-2	Output shaft bearing spacer	306, 306A
	1	306-60-7	Output shaft bearing spacer	306B, 306C, 306E
22	1	306-78-1	Output shaft seal sleeve	306 all
23	3	306-80-1A	Input bearing shim - .005	306 all
	3	306-80-1B	Input bearing shim - .007	306 all
	3	306-80-1C	Input bearing shim - .020	306 all
24	3	306-80-2A	Output bearing shim - .005	306 all
	3	306-80-2B	Output bearing shim - .007	306 all
	3	306-80-2C	Output bearing shim - .020	306 all
25	3	306-80-3A	Output gear bearing shim- .003	306 all
	3	306-80-3B	Output gear bearing shim- .005	306 all
	3	306-80-3C	Output gear bearing shim- .007	306 all
	3	306-80-3D	Output gear bearing shim- .020	306 all
26	1	306-85-1	Shift cylinder cap	306 all - see air control update - pg 5
27	1	306-85-2	Shift cylinder	306 all - see air control update - pg 5
28	1	306-85-3	High - low shift piston	306 all - see air control update - pg 5
29	3	306-80-7A	High - low shift shaft shim .005	306 all - eff SN 3901
	2	306-80-7B	High - low shift shaft shim .007	306 all - eff SN 3901
	1	306-80-7C	High - low shift shaft shim .020	306 all - eff SN 3901
	1	306-80-7D	High - low shift shaft shim .050	306 all - eff SN 3901
33	1	306-85-8	High - low shift return spring	306 all
34	1	306-60-9	Output spacer	306B, 306C
35	1	306-85-10	Breather assembly	306 all thru SN 1471
	4	306-85-13	Modified output gear snap ring	306 all SN 1000 & up - see #52
37	1	306-85-32	High-low shift fork & shaft assy	306 all

Pro Gear and Transmission • 906 W. Gore St. Orlando, FL 32805 • 1 (877) 776-4600 / (407) 872-1901 • progearandtransmission.com • parts@eprogear.com

39	2	JM612910	Input shaft bearing cup	306 all
40	2	JM612949	Input shaft bearing cone	306 all
41	2	47420	Output shaft bearing cup	306 all
42	2	47487	Output shaft bearing cone	306 all
43	4	29630	Output gear bearing cup	306 all thru SN 999
	4	33475	Output gear bearing cup	306 all SN 1000 & up
44	4	29675	Output gear bearing cone	306 all thru SN 999
	4	33275	Output gear bearing cone	306 all SN 1000 & up
45	2	306-60-3	Output gear bearing cup spacer	306 all thru SN 416
	2	306-60-4	Output gear bearing cup spacer	306 all SN 417 - 999
46	1	306-85-32	High-low shift fork & shaft assy	306 all
	2	M612949XS	Output gear bearing cone spacer	306 all thru SN 999
47	1	20DU20	Output shaft bushing	306 all, excepy 306E
52	2	RR475	Output gear snap ring	306 all thru SN 416
	4	N5000-475	Output gear snap ring	306 all SN 417 - 999
	4	306-85-13	Output gear snap ring	306 all SN 1000 & up - see #35
54	2	306-60-5	Output gear bearing spacer	306 all SN 417 - 700
57	3	208-85-3	Yoke retention washer	306 all
58	3	1.25-12LN	Yoke retention lock nut	306 all
59	2	12HP50N-S	#12 o-ring drain plug	306 all SN 3204 & up
	3	7404011	Magnetic plug	306 all SN 3203 & prior
60	1	22S-S12M	#12 o-ring magnetic drain plug	306 all SN 3204 & up
61	2	1/2x2.00	Housing alignment dowel	306 all
62	20	3/8-16x2.50	Hex head cap screw - hsg flgs	306 all
63	20	3/8-16LN	Lock nut - housing flanges	306 all
64	25	3/8-16x1.25	Hex head cap screw - cvr att.	306 all
65	3	1/4-20x2.75	Socket head cap scr - cyl cap	306 all - see air control update
66	1	NL8G	Piston screw lock washer	306 all - with air control update
	3	1/4-20x1.50	Hex head cap screw - cyl cap	306, 306A - see air control update
67	1	5/16-18x1.00	Socket head screw - piston	306 all - see air control update
68	40	3/8FW	3/8 flat washer - housing bolts	306 all
69	1	1/4x1.25	Roll pin - See # 37	306 all
71	1	711820	Shift piston seal	306 all - see air control update
73	2	AS568-031	Shift cylinder cap sealing o-ring	306 all - see air control update
75	1	1” exp plug	Shift rod housing hole cap	306 thru SN 1290
	1	306-20-4	Shift rod housing hole cover	306 all SN 1291 & up
77	1	3/8-16x1.50	Hex head cap screw -See # 37	306 all
78	3-5	95601A395	Drain plug gasket	306 all
79	1	3/8NPT	Street ell - see also #81	306 SN 1472 & up
80	1	MBGF	Breather	306 SN 1472 & up
	1	301370	Breather - see also item 35	306 thru SN 1471
81	1	8GBU	Female connector	306 thru SN 1471
	1	3/8NPT	Street ell - see also #79	306 SN 1472 & up
85	1	306-80-5	Gasket-washer	306 all
88	1	306-85-14	Speedo sender plug	306B, 306C
89	1	95606A270	Speedo sender plug gasket	306B, 306C
			Service Assemblies & Kits	
		306-01	Seal kit	306 all
		306-13	Dip stick kit - 1 1/16 drain hole	306 all SN 3204 & up - front or rear
		306-14	Dip stick kit - 3/4” drain hole	306 all thru SN 3203 - front or rear
		306S-1	Input gear & shaft assembly	306B
		306S-2	Input gear & shaft assembly	306C
		306S-3	Input gear & shaft assembly	306, 306B SN1700-1899
		306S-4	Input gear & shaft assembly	306A, 306C SN1700-1899

Pro Gear and Transmission • 906 W. Gore St. Orlando, FL 32805 • 1 (877) 776-4600 / (407) 872-1901 • progearandtransmission.com • parts@eprogear.com

			HI/LO Shift Air Control Update	
26	1	306-85-1	Air cylinder cap	Update to 306-85-22 air cap/cyl
27	1	306-85-2	Air cylinder	Update to 306-85-22 air cap/cyl
28	1	306-85-3	Shift piston	Update to 306-85-24 piston
29	A/R	306-80-7A	High-low shaft shim .005	Eff SN 3901
	A/R	306-80-7B	High-low shaft shim .007	Eff SN 3901
	A/R	306-80-7C	High-low shaft shim .020	Eff SN 3901
	A/R	306-80-7D	High-low shaft shim .050	Eff SN 3901
65	3	1/4-20x2.75	Hex head cap screw - cyl cap	Update to 1/4-20x1.0 SHCS
67	1	5/16-18x1.0	Flat head socket screw - piston	Update to 5/16-18x1.0 SHCS
				use with NL8G lock washer (66)
71	1	711820	Piston v-seal	Update to AS324 0-ring
			Application Specific Parts	
	1	35083	Disconnect oil seal	306-02 - ALL
	1	34889	Input oil seal	306 all thru SN 1393
		37330	Input oil seal	306 all SN 1394 & up
	1	32397	Output oil seal	306 all - replaces 32395
	2	6.3-4-711-1	End yoke	306A, B-1, C-1, D-1
	1-3	6-4-4551-1	End yoke	306A, B-1, C-1, C-2, D-1
	1	6801-12	#12 o-ring to 1/2 tube ell	306B-1, C-1 - SN 3204 & up
	1	8-12C5BU-S	3/4-16 to #12 JIC ell	306B-1, C-1 - to SN3203
	1	358-85-14G	Dipstick tube	306B-1, C-1
	1	358-85-13L	Dipstick - 11.5qt fill qty	306B-1, C-1
	1	HK1313	Clamp	306B-1, C-1
		306-02	**Disconnect Components**	
1	1	306-10-3	Disconnect housing	306-02
2	1	306-35-2	Disconnect shift collar	306-02
3	1	306-40-2	Disconnect output shaft	306-02
	1	306-40-5	Disconnect shift shaft-See#29	306-02
	1	306-50-2	Disconnect shift fork - See#29	306-02
6	1	306-85-4	Shift cylinder cap	306-02 - see note below
7	1	306-85-5	Shift cylinder	306-02
8	1	306-85-6	Shift piston	306-02 - see note below
9	1	306-85-7	Shift return spring	306-02
10	1	21-492	Shift signal switch	306-02
12	1	6214	Output ball bearing	306-02
14	1	N5000-500	Bearing retention snap ring	306-02
21	3	1/4-20x1.50	Hex head cap screw - cyl. cap	306-02
22	1	5/16-18x1.00	Flat head cap screw - piston	306-02 - see note below
	1	1/4x1.25	Roll pin - See #29	306-02
24	1	1/4D	Steel ball - switch actuation	306-02
25	1	711080	Piston V seal	306-02
26	2	AS026	Cylinder sealing o-ring	306-02
27	1	NL8G	Piston screw lock washer	306-02
28	1	306-80-6	Signal switch washer	306-02 - update to 95601A360
29	1	306-85-18	Shift fork & shaft assembly	306-02
			Disconnect Air Control Update	
6	1	306-85-21	Disconnect cylinder cap	update to 306-85-4
8	1	306-85-23	Disconnect piston	update to 306-85-6
22	1	5/16-18	Socket head cap screw - piston	update from FHCS
27	1	NL8G	Lock washer	update
			Dip Stick Kits	
		306-14	For units with a .750 drain plug	
		306-13	For units with a #12 o-ring plug	

Pro Gear and Transmission • 906 W. Gore St. Orlando, FL 32805 • 1 (877) 776-4600 / (407) 872-1901 • progearandtransmission.com • parts@eprogear.com

TO DISASSEMBLE THE TRANSFER CASE

Drain the oil from the case before removing it from the vehicle. Thoroughly inspect the magnetic drain plug for signs of metal debris. Retain a sample of the oil for further testing if required.

Remove the yoke lock nuts (58) and washers (57) from the shaft ends and remove the end fittings (yokes or flanges) from the input and output locations.

Remove the three hex head screws from the air inlet shift cylinder cap (26) and remove the cap. On newer units the cap and cylinder are one piece. On older units the cylinder is separate. Be careful to retain the two sealing o-rings from the cylinder for reuse on older units. Remove the screw (67) holding the piston (28) in place. It is recommended that if screw (67) is a flat head socket head that it be replaced with a socket head screw and lock washer (66) as shown on the drawings. Refer to the parts list for part numbers.

Rotate and support the unit disconnect down blocking it securely. Remove the 12 hex head cap screws (64) securing the bearing retainers (4) & (5) and remove the retainers and the bearing cup shims (23) & (24). Retain the shims for use during the reassembly process. Remove the lock nuts (63), washers (68) and screws (62) from the housing flanges. Drive out the two dowels (61) in the ends and pry the housings apart. Remove the rear housing (2) and tap out the two bearing cups (39) & (41).

Lift the input and output shaft assemblies out of the front housing (1) with shift fork and shaft assembly (37), shift return spring (33) and shift collar (10). Rotate the front housing so that the disconnect assembly (19) can be removed by unscrewing the 6 screws (64). Retain the air shift return spring (9). Tap out the two bearing cups (39) & (41).

Lift the input shaft (17) & gear (9) out of the rear housing. Remove the two bearing cones (40), and yoke spacer (20) from the input shaft assembly. The gear cannot be removed. If service of the gear or shaft is required, refer to the parts list for the correct service assembly.

Lift out the output shaft (13) & gear (7) & (8) assembly out of the rear housing. Remove both bearing cones (42), spacers (21) & (34) and drive the gear assemblies (7) & (8) off the shaft through the bearing cones. Remove the shift collar (10) and the pocket bushing (47) from the shaft. From the gear assemblies remove the bearing cones (44), spacer (12) and shims (25). Retain the shims for use in reassembly. Remove the two bearing cups (43) with snap rings (35).

Flip the remaining housing over flange down and remove the 13 cap screws (64) holding the cover (6) and disconnect assembly (19) in place and remove them. Drive the two remaining bearing cups (39) & (41) from the housing.

Pro Gear and Transmission • 906 W. Gore St. Orlando, FL 32805 • 1 (877) 776-4600 / (407) 872-1901 • progearandtransmission.com • parts@eprogear.com

TO DISASSEMBLE THE DISCONNECT

Remove the signal switch (10) and actuation ball (24). Remove three hex head screws (21) from the cylinder cap (6) and remove the cylinder (7). Be careful to retain the sealing o-rings (27). Remove the screw (22) and the piston (8). Remove the collar (2) with fork assembly (29). Tap the shaft (3) through bearing (12) and remove it. Remove the seal, snap ring (14) and bearing (12).

CLEANING & INSPECTION

All components should be thoroughly cleaned and inspected for signs of fatigue or wear. It is suggested all bearings, bushings, o-rings, piston seals and yoke seals be replaced during any disassembly process particularly if metal chips were found in the oil. Make sure all sealing surfaces are completely cleaned of RTV and hicks/nicks.

REASSEMBLY OF THE DISCONNECT ASSEMBLY

Install bearing (12), snap ring (14) and the output seal in the housing (1). Insert the disconnect shaft (3) through bearing (12). Install collar (2) with fork assembly (29) onto the shaft. Assemble the o-rings (26) onto the cylinder (7) and assemble it to the housing. Install the piston seal (25) to the piston (8) being careful to position the open end of the V seal out. Install the piston/seal into the cylinder with care and attach the piston to the fork assembly with screw (22). To maximize operational life on early units, refer to the update note found following the disconnect components list.

Place the air cap (6) in place and attach it to the housing with 3 screws (21) tightened sequentially to 7ft/lb. Install the shift return spring (9) on the shift shaft and install switch (10) and shift ball (24).

TO REASSEMBLE THE TRANSFER CASE

With the front housing (1) flange down, install the bearing cups (39) and (41) in their respective bores till they are flush with the housing surface. Install the disconnect assembly (19) with RTV sealant using 7 screws (64). Install cover (6) also with screws (64). Rotate the housing and block it securely disconnect down. Confirm that the bearing cups (39) & (41) in the housing bores are seated securely against the cover and disconnect pilot diameters. Assemble the input shaft (17) with bearing cones (40) on each end seated securely against the shaft shoulders. Drop the shaft into the bearing cup in the front housing half.

Place a bearing cone (44) into each gear bore and press in a bearing cup (43) into gears (7) & (8) and drive it just past the snap ring groove. Install snap rings (35) and spacer (45) if used - see page 6 - and press the remaining cup into the gear seating it completely and solidly. Turn the gear over and reseat the first cup. The cups should be seated securely. This is important to proper operation. Insert the remaining bearing cone and clamp the gear through the cones and spin to seat the bearings properly.

Pro Gear and Transmission • 906 W. Gore St. Orlando, FL 32805 • 1 (877) 776-4600 / (407) 872-1901 • progearandtransmission.com • parts@eprogear.com

Bearing adjustment

For high gear (7), install both bearing cones (44) along with spacer (12 or 46) and about .045" of shims (25) into the gears. Using a press, clamp the bearings through the cones and spin the gear to seat the bearings. Using shims (25) adjust the end play to .000/.001 when a light pressure is applied to the gear using a pry bar and the gear rotates one half to one rotation when spun. Add an additional .005 to the shim pack to compensate for bearing expansion from heat.

For low gear (8), measure the diameter of the output shaft (13) under the low gear position. If the measurement is between **2.725 & 2.7515** the bearings will be a press fit. Adjust the bearings as above to have the same .000/.001 end play (the same one half to one rotation when spun). *(the bearing cage will not move, the rollers will not skid but individual rollers can be moved slightly)* Then add **.009** in shims for expansion compensation and install the gear on the shaft.

If the measurement is between **2.750 & 2.7495** the bearings will be a slip fit. In this case adjust the bearings as above (one half to one rotation when spun) but add shims (about .006) until the gear rotates freely and the bearing cage can be held by hand. Do not add any extra shims.

Note: the end yoke lock nut must be tightened to 500/600lb/ft with slip fit bearings.

Note: Units with serial numbers 101-999 use a cup spacer (45). For units with SN 101-416, use L shaped cup spacer (45) and snap ring (52) specified for that serial number range. For units with SN 417-999, install with the proper spacer, measure the distance from the cup to the snap ring groove outer surface. Deduct the snap ring thickness and reduce the spacer thickness by the result and reassemble. Units SN 417-700 might have an additional cup spacer (54).

Install one of the gears onto the output shaft (13), install the shift collar (10) and install the other gear assembly making sure both seat properly. Install spacers (21) & (34) in their appropriate positions on shaft (13) being careful not to damage the ID of the spacers.

Place the assembled output shaft with shift fork assembly (37/45) into the lower bore of housing (1). Place the shift return spring on the shift shaft. Apply sealant to the housing flange sealing surface and install the rear housing (2) aligning it with the shift shaft and two dowels (61). Bolt the two halves together with screws (62), locknuts (63) and washers (68).

Tap bearing cups (39) & (41) into housing (2) and seat them against the mating cones. Using screws (64), install bearing retainers (4) & (5) tightening the screws while rotating the shafts to properly seat the bearings until all end play is removed. Remove the retainers and measure the depth from the housing face to the bearing cup shoulder. Subtract that measurement from the depth of the retainer shoulder and add .012 for a bearing preload. Add shims in that amount, strike the housing about the bore to free the cup, apply RTV to the retainer flange and install it with the shims.

Pro Gear and Transmission • 906 W. Gore St. Orlando, FL 32805 • 1 (877) 776-4600 / (407) 872-1901 • progearandtransmission.com • parts@eprogear.com

Insert the appropriate oil seals into the retainers now. Install o-ring (71) on piston (28), add a small amount of RTV to the end of the shift shaft, and attach the piston to the shift shaft with a socket head cap screw and washer (66) & (67) **It is helpful to the shift operation that the shift system be updated to the components shown on page 5.**

For units with SN 3901 and above or units that have been updated using fork and shaft assembly 306-85-32 (item 37), the shift shaft needs to be shimmed to assure correct operation. Prior to attaching the piston, with the shift shaft fully extended by the shift return spring, measure the distance between the housing surface where the air cylinder mounts and the end of the shift shaft. Deduct that measurement from 1.262 and add the result in shims (29) placed under the piston (28).

Install the shift cylinder (26) into the housing and attach it with 3 screws (65) torqued to 7 lb/ft.

Replace the end fittings and retain them with washers (57) and lock nuts (58) tightened to 500/600 lb/ft. Install all plugs and refill the housing with 11.5 quarts of the recommended lubricant.

Pro Gear and Transmission • 906 W. Gore St. Orlando, FL 32805 • 1 (877) 776-4600 / (407) 872-1901 • progearandtransmission.com • parts@eprogear.com